INSTALLATION AND OPERATION MANUAL

Stratford

(OB04003 Model)

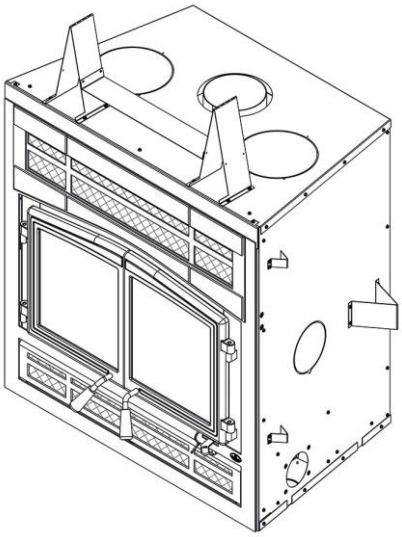

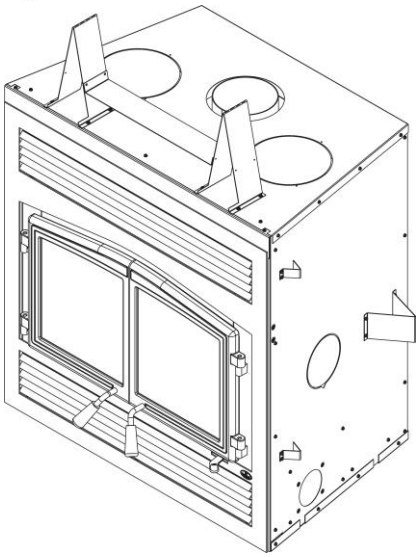

US ENVIRONMENTAL PROTECTION AGENCY PHASE II CERTIFIED WOOD FIREPLACE

Listed to standards ULC-S610 and UL 127
by an accredited laboratory

This appliances is EPA ≤ 4.5 g/h & Washington State Certified

www.osburn-mfg.com

Stove Builder International Inc.

250, rue de Copenhague, St-Augustin-de-Desmaures (Québec) Canada G3A 2H3

customer service: 418-908-8002 E-mail: tech@sbi-international.com

This manual is available for free download on the manufacturer's web site. It is a copyrighted document. Re-sale is strictly prohibited. The manufacturer may update this manual from time to time and cannot be responsible for problems, injuries, or damages arising out of the use of information contained in any manual obtained from unauthorized sources.

READ AND KEEP THIS MANUAL FOR REFERENCE

45919A

Printed in Canada 08-01-2018

THANK YOU FOR CHOOSING THIS OSBURN WOOD FIREPLACE

As one of North America's largest and most respected wood stove and fireplace manufacturers, Stove Builder International takes pride in the quality and performance of all its products. We want to help you get maximum satisfaction as you use this product.

In the pages that follow you will find general advice on wood heating, detailed instructions for safe and effective installation, and guidance on how to get the best performance from this fireplace as you build and maintain fires, and maintain your wood heating system.

We recommend that our wood burning hearth products be installed and serviced by professionals who are certified in the United States by NFI (National Fireplace Institute®) or in Canada by WETT (Wood Energy Technology Transfer) or in Quebec by APC (Association des Professionnels du Chauffage).

Congratulations on making a wise purchase.

If this fireplace is not properly installed, combustible materials near it may overheat. To reduce the risk of fire, follow the installation instructions in this manual exactly. Contact local building or fire officials about restrictions and installation inspection requirements in your area.

Please read this entire manual before you install and use your new fireplace. You may need to get a building permit for the installation of this fireplace and the chimney that it is connected to. Consult your municipal building department or fire department before installation. We recommend that you also inform your home insurance company to find out if the installation will affect your policy.

This heating unit is designed to serve as a supplementary heat source. We recommend that a primary heat source also be available in the home. The manufacturer cannot be responsible for costs associated with the use of another heating system.

CAUTION: Do not attempt to modify or alter the construction of the fireplace or its components. Any modification or alteration of construction may void the warranty, listings and approvals of this system. In that case, Stove Builder International (SBI) will not be responsible for damages. Install the fireplace only as described in these instructions.

Table of content

PART A - OPERATION AND MAINTENANCE 6

1 Safety Information 6

1.1 Summary of Operation and Maintenance Cautions and Warnings 6

2 General Information on Stratford (OB04003) 8

2.1 Appliance Performance (1) 8

2.2 General Features 9

2.3 Zone Heating and How to Make it Work for You 13

2.4 The Benefits of Low Emissions and High Efficiency 13

2.5 The SBI Commitment to You and the Environment 13

2.5.1 What is Your New Fireplace Made Of? 13

3 Fuel 14

3.1 Materials That Should Not be Burned 14

3.2 How to Prepare or Buy Good Firewood 14

3.2.1 What is Good Firewood? 14

3.2.2 Tree Species 14

3.2.3 Log Length 15

3.2.4 Piece Size 15

3.2.5 How to Dry Firewood 15

3.2.6 Judging Firewood Moisture Content 16

3.3 Manufactured Logs 17

4 Operating Your Fireplace 18

4.1 The use of a firescreen 18

4.2 Your First Fires 18

4.3 Lighting Fires 18

4.3.1 Conventional Fire Starting 19

4.3.2 The Top Down Fire 19

4.3.3 Two Parallel Logs 19

4.3.4 Using Fire Starters 20

4.4 Maintaining Wood Fires 20

4.4.1 General Advice 20

4.4.2 Ash Removal 20

4.4.3 Raking Charcoal 21

4.4.4 Firing Each New Load Hot 21

4.4.5 Turning Down the Air Supply 21

4.4.6 Building Different Fires for Diverse Needs 22

5 Maintaining Your Wood Heating System 24

5.1 Fireplace Maintenance 24

5.1.1 Plated Finish Maintenance 24
5.1.2 Glass Door Cleaning 24
5.1.3 Door Adjustment....25
5.1.4 Door Alignment....26
5.1.5 Replacing the Door Gasket....27
5.1.6 Replacing the Glass Gasket and/or the Glass....28
5.1.7 Cleaning and Painting the Fireplace....29
5.2 Chimney and Chimney Liner Maintenance 29
5.2.1 Why Chimney Cleaning is Necessary....29
5.2.2 How Often Should You Clean the Chimney?....29
5.2.3 Cleaning the Chimney 30
5.2.4 Fire Baffle Removal Prior to Cleaning the Chimney 30
5.2.5 Chimney Fire 31
PART B – INSTALLATION 32
Summary of Installation Cautions and Warnings 32
Regulations Covering Fireplace Installation....33
6 Fireplace Installation 33
6.1 Standoff Installation 33
6.2 Locating the STRATFORD 33
6.2.1 Raised base installation of more than 4" (R value for the hearth extension not required) 34
6.2.2 On the floor or on a raised base of less than 4" installation (R value for the hearth extension required)....35
6.2.3 R Calculations 36
6.2.4 Minimum HeartH Extension Requirements....37
6.2.5 Framing, Facing, Mantel, and Combustible Shelf....38
7 Clearances to Combustible Material....44
7.1 Locating the Certification Label....44
8 The Venting System....45
8.1 General....45
8.2 Suitable Chimneys....45
8.3 Minimum Chimney Height....45
8.4 The Relationship Between the Chimney and the House....45
8.4.1 Why the chimney should penetrate the highest heated space 45
8.5 Chimney Installation Notes 46
8.6 Chimney Installation Instructions 49
8.6.1 Examples of Typical Chimney Installation 49
8.6.2 Offset Chimney Installation....53
8.7 Angled Wall Radiation Shield....57
8.8 Chimney Support Installation....58

8.8.1 Universal Roof Support 58
8.8.2 Universal Offset Support 58
8.9 Installation Instructions for Masonry Application 58
8.10 Supply of Combustion Air 59
8.10.1 Air Supply in Conventional Houses 59
Appendix 1: Heat Distribution Kit Installation 60
Appendix 2: Blower Maintenance or Replacement 72
Appendix 3: Installing the Optional Door Overlay 75
Appendix 4: Installing the Fresh Air Intake Kit 76
Appendix 5: Installing the Optional Firescreen (AC01560).....80
Appendix 6: Installation of Secondary Air Tubes and Baffle 81
Appendix 7: Exploded Diagram and Parts List.....85

REGISTER YOUR WARRANTY ONLINE

To receive full warranty coverage, you will need to show evidence of the date you purchased your fireplace. Keep your sales invoice. We also recommend that you register your warranty online at:

https://www.osburn-mfg.com/en/warranty/warranty-registration/

Registering your warranty online will help us to quickly track the information we need about your fireplace.

PART A - OPERATION AND MAINTENANCE

Please see Part B for installation instructions.

1 SAFETY INFORMATION

1.1 SUMMARY OF OPERATION AND MAINTENANCE CAUTIONS AND WARNINGS

- **HOT WHILE IN OPERATION, KEEP CHILDREN, CLOTHING AND FURNITURE AWAY. CONTACT MAY CAUSE SKIN BURNS. GLOVES MAY BE NEEDED FOR FIREPLACE OPERATION.**
- **USING A FIREPLACE WITH CRACKED OR BROKEN COMPONENTS, SUCH AS GLASS OR FIREBRICKS OR BAFFLES MAY PRODUCE AN UNSAFE CONDITION AND MAY DAMAGE THE FIREPLACE.**
- **OPERATE ONLY WITH DOOR FULLY CLOSED OR FULLY OPEN WITH FIRESCREEN IN PLACE. IF DOOR IS LEFT PARTLY OPEN, GAS AND FLAME MAY BE DRAWN OUT OF THE OPENING, CREATING RISKS FROM BOTH FIRE AND SMOKE.**
- **OPEN THE AIR CONTROL FULLY BEFORE OPENING THE LOADING DOOR.**
- **THIS FIREPLACE HAS BEEN TESTED FOR USE WITH AN OPEN DOOR IN CONJUNCTION WITH A FIRESCREEN (AC01560, SOLD SEPARATELY). THE DOOR MAY BE OPEN, OR FIRESCREEN REMOVED ONLY DURING LIGHTING PROCEDURES OR RELOADING. ALWAYS CLOSE THE DOOR OR PUT BACK THE FIRESCREEN AFTER IGNITION. DO NOT LEAVE THE FIREPLACE UNATTENDED WHEN THE DOOR IS OPENED WITH OR WITHOUT FIRESCREEN.**
- **DO NOT INSTALL THE FIREPLACE OUTDOORS.**
- **THE FIREPLACE AND CHIMNEY MUST BE IN AN ENCLOSURE UP TO THE ATTIC.**
- **NEVER USE GASOLINE, LANTERN FUEL (NAPHTHA), FUEL OIL, MOTOR OIL, KEROSENE, CHARCOAL LIGHTER FLUID, OR SIMILAR LIQUIDS OR AEROSOLS TO START A FIRE IN THIS FIREPLACE. KEEP ALL SUCH LIQUIDS OR AEROSOLS WELL AWAY FROM THE FIREPLACE WHILE IT IS IN USE.**
- **DO NOT STORE FUEL WITHIN HEATER MINIMUM INSTALLATION CLEARANCES.**
- **BURN ONLY SEASONED NATURAL FIREWOOD.**
- **DO NOT BURN:**
  - **GARBAGE OF ANY KIND,**
  - **COAL OR CHARCOAL,**
  - **TREATED, PAINTED OR COATED WOOD,**
  - **PLYWOOD OR PARTICLE BOARD,**
  - **FINE PAPER, COLORED PAPER OR CARDBOARD,**
  - **SALT WATER DRIFTWOOD,**
  - **MANUFACTURED LOGS CONTAINING WAX OR CHEMICAL ADDITIVES,**
  - **RAILROAD TIES OR**
  - **LIQUIDS SUCH AS KEROSCENE OR DIESEL FUEL TO START A FIRE.**
- **THIS APPLIANCE SHOULD BE MAINTAINED AND OPERATED AT ALL TIMES IN ACCORDANCE WITH THESE INSTRUCTIONS.**
- **DO NOT ELEVATE THE FIRE BY MEANS OF GRATES, AND IRONS OR OTHER MEANS.**
- **THIS FIREPLACE MUST ALWAYS BE USED WITH THE ORIGINAL ANDIRONS (SEE APPENDIX 7: EXPLODED DIAGRAM AND PARTS LIST FOR REPLACEMENT PARTS).**

- **SOME JURISDICTIONS IN THE USA REQUIRE A SUPPLY OF OUTDOOR COMBUSTION AIR FOR THE FIREPLACE. IN CANADA, AN OUTDOOR AIR SUPPLY IS NOT REQUIRED, IF A CARBON MONOXIDE (CO) DETECTOR/ALARM IS LOCATED IN THE ROOM IN WHICH THE FIREPLACE IS INSTALLED. THE CO DETECTOR WILL PROVIDE WARNING IF FOR ANY REASON THE WOOD FIREPLACE FAILS TO FUNCTION CORRECTLY. IF YOU ARE REQUIRED TO INSTALL AN OUTDOOR AIR SUPPLY, WE RECOMMEND THAT YOU ALSO INSTALL A CO DETECTOR/ALARM TO PROVIDE WARNING IF SMOKE SPILLAGE FROM THE FIREPLACE OCCURS.**

CAUTION: **KEEP COMBUSTIBLE MATERIALS AT LEAST 48 INCHES AWAY FROM THE FRONT OF THE FIREPLACE OPENING.**

CAUTION: **DO NOT USE A FIREPLACE INSERT AND OTHER PRODUCTS NOT SPECIFIED FOR USE WITH THIS FIREPLACE.**

CAUTION: **DO NOT OBSTRUCT AIR INTLETS. THIS FIREPLACE NEEDS AIR FOR ITS GOOD OPERATION.**

CAUTION: **DO NOT BLOCK THE HOT AIR VENTS TO THE FIREPLACE AS THIS WILL CAUSE THE FIREPLACE TO OVERHEAT.**

CAUTION: **DO NOT INSTALL IN A MOBILE HOME (CANADA) OR MANUFACTURED HOME (USA). (see note p.9)**

WARNING: **DO NOT USE MATERIALS OTHER THAN THOSE LISTED IN THE REPLACEMENT PARTS SECTION DURING INSTALLATION AS THEY MAY BE SAFETY HAZARDS AND A FIRE COULD RESULT.**

WARNING: **THIS FIREPLACE HAS NOT BEEN TESTED WITH AN UNVENTED OR VENTED GAS LOG SET. TO REDUCE RISK OF FIRE OR INJURY, DO NOT INSTALL AN UNVENTED GAS LOG SET INTO THIS FIREPLACE.**

PLEASE NOTE THAT THE PICTURES SHOWN IN THIS MANUAL ARE GENERIC AND MAY NOT MATCH EXACTLY THE LOOK OF YOUR FIREPLACE.

2 GENERAL INFORMATION ON STRATFORD (OB04003)

2.1 APPLIANCE PERFORMANCE (1)

Fuel type	Dry cordwood	
Recommended heating area [*]	750 to 2,100 ft^2 (70 to 195 m^2)	
Firebox volume	2.5 ft^3 (0.071 m^3)	
Maximum burn time [*]	9 h	
Maximum heat output (2) (dry cordwood)	75,000 BTU/h (22.0 kW)	
Overall heat output rate (min. to max.) (2)(3)	11,500 BTU/h to 30,500 BTU/h (3.4 kW to 8.9 kW)	
Average overall efficiency (3) - EPA Cribs / Douglas Fir	55.0% (HHV (4))	60.0% (LHV (5))
Average overall efficiency (3) - Dry cordwood	To come% (HHV(4))	To come% (LHV(5))
Optimum efficiency (2)(6)	75.0%	
Average particulate emissions rate (7)	4.4 g/h (EPA / CSA B415.1-10)	

[*] Recommended heating area and maximum burn time may vary subject to location in home, chimney draft, heat loss factors, climate, fuel type and other variables. The recommended heated area for a given appliance is defined by the manufacturer as its capacity to maintain a minimum acceptable temperature in the designated area in case of a power failure.

(1) Values are as measured per test method, except for the recommended heating area, firebox volume, maximum burn time and maximum heat output.

(2) The maximum heat output (dry cordwood) is based on a loading density varying between 15 lb/ft^3 and 20 lb/ft^3. Other performances are based on a fuel load prescribed by the standard. The specified loading density varies between 7 lb/ft^3 and 12 lb/ft^3. The moisture content is between 19% and 25%.

(3) As measured per CSA B415.1-10 stack loss method.

(4) Higher Heating Value of the fuel.

(5) Lower Heating Value of the fuel.

(6) Optimum overall efficiency at a specific burn rate (LHV).

(7) This appliance is officially tested and certified by an independent agency.

2.2 GENERAL FEATURES

Maximum log length	21 in (533 mm) east-west*
Flue outlet diameter	6 in (150 mm)
Chimney diameter	6 in (150 mm)
Type of chimney	CAN/ULC S604, UL 103 (1700 °F) CAN/ULC S629, UL 103 HT (2100 °F)
Baffle material	C-Cast
Approved for alcove installation	Not approved
Approved for mobile home installation‡	Not approved
Shipping weight (without option)	424 lb (192 kg)
Appliance weight (without option)	353 lb (160 kg)
Type of door	Double glass with cast iron frame
Type of glass	Ceramic glass
Blower	Included (up to 176 CFM)
Particulate emission standard	EPA / CSA B415.1-10
USA standard (safety)	UL 127
Canadian standard (safety)	ULC-S610

* *East-west: through the door you see the longitudinal sides of the logs; north-south: through the door you see the tips of the logs.*

‡ *Mobile home (Canada) or manufactured home (USA): The US department of Housing and Urban Development describes "manufactured homes" better known as "mobile homes" as followed; buildings built on fixed wheels and those transported on temporary wheels/axles and set on a permanent foundation. In Canada, a mobile home is a dwelling for which the manufacture and assembly of each component is completed or substantially completed prior to being moved to a site for installation on a foundation and connection to service facilities and which conforms to the CAN/CSA-Z240 MH standard.*

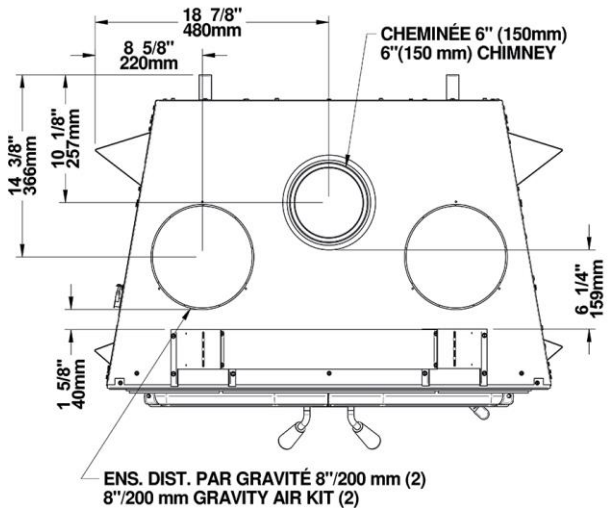
18 7/8"
480mm
8 5/8"
220mm
CHEMINÉE 6" (150mm)
6"(150 mm) CHIMNEY
14 3/8"
366mm
10 1/8"
257mm
6 1/4"
159mm
1 5/8"
40mm
ENS. DIST. PAR GRAVITÉ 8"/200 mm (2)
8"/200 mm GRAVITY AIR KIT (2)

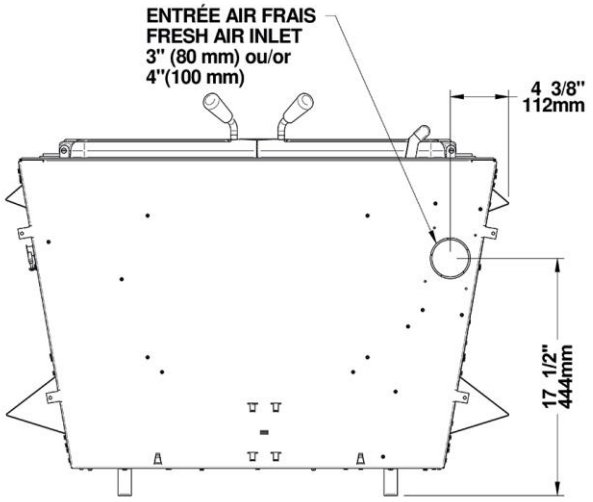
ENTRÉE AIR FRAIS
FRESH AIR INLET
3" (80 mm) ou/or
4"(100 mm)
4 3/8"
112mm
17 1/2"
444mm

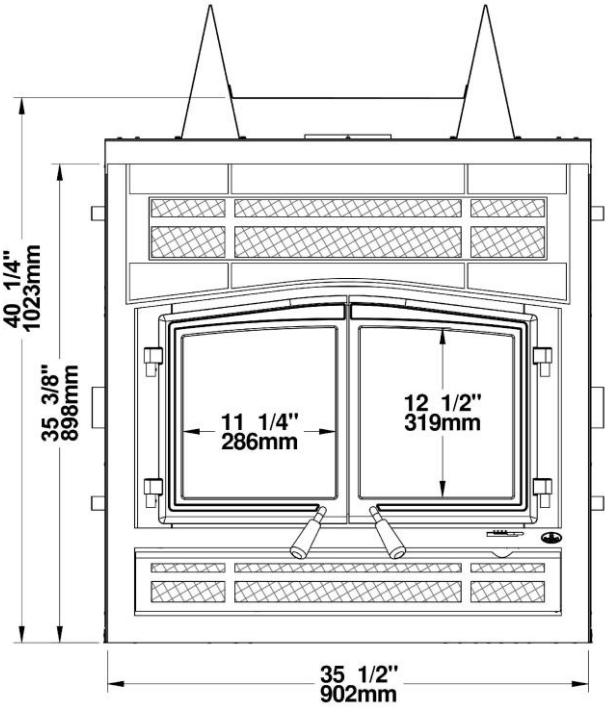
40 1/4"
1023mm
35 3/8"
898mm
11 1/4"
286mm
12 1/2"
319mm
35 1/2"
902mm

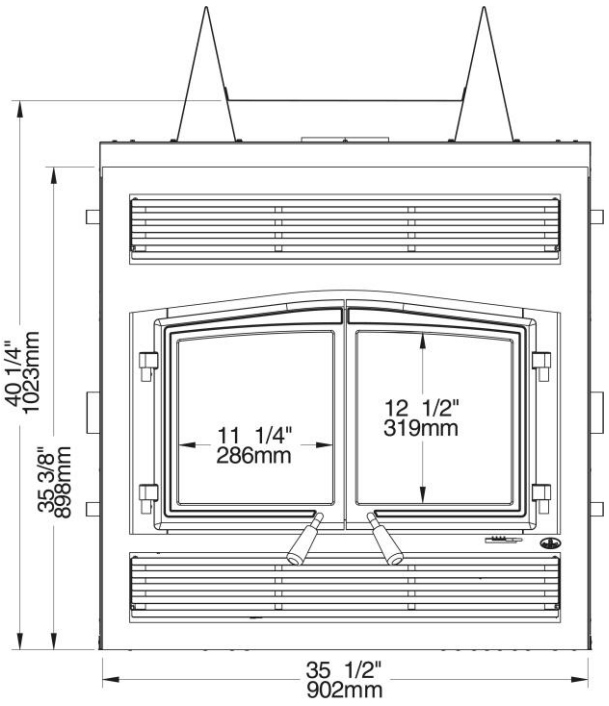
40 1/4"
1023mm
35 3/8"
898mm
11 1/4"
286mm
12 1/2"
319mm
35 1/2"
902mm

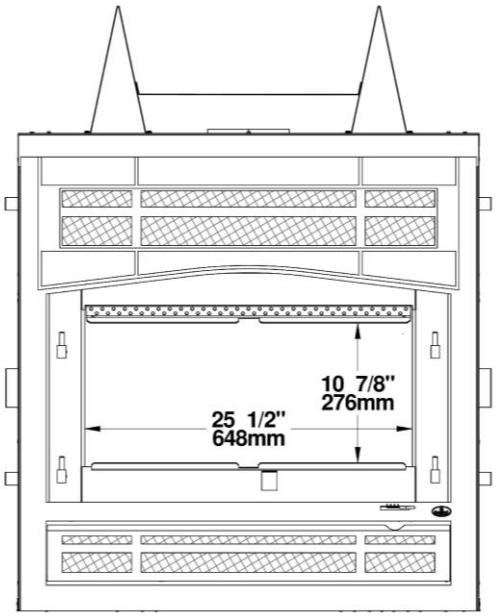
10 7/8"
276mm
25 1/2"
648mm

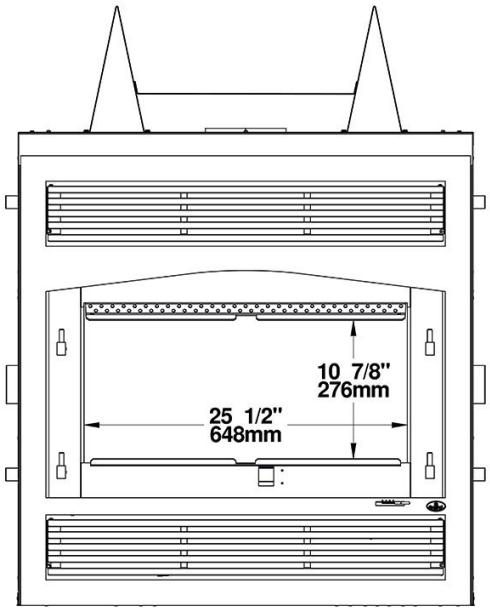
10 7/8"
276mm
25 1/2"
648mm

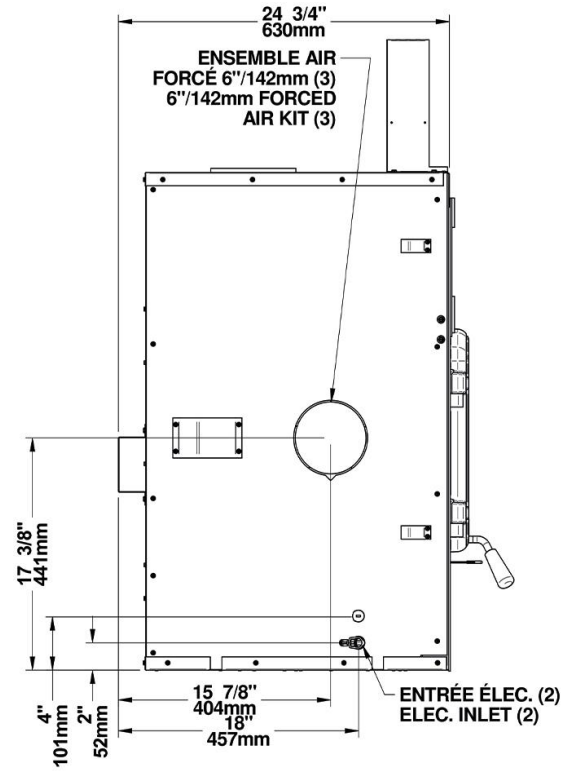
24 3/4"
630mm
ENSEMBLE AIR
FORCÉ 6"/142mm (3)
6"/142mm FORCED
AIR KIT (3)
17 3/8"
441mm
4"
101mm
2"
52mm
15 7/8"
404mm
18"
457mm
ENTRÉE ÉLEC. (2)
ELEC. INLET (2)

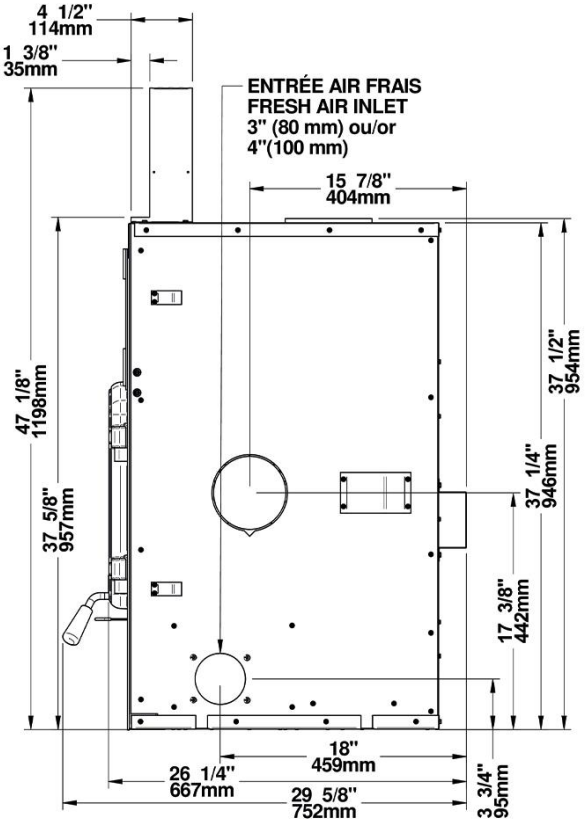
4 1/2"
114mm
1 3/8"
35mm
ENTRÉE AIR FRAIS
FRESH AIR INLET
3" (80 mm) ou/or
4"(100 mm)
15 7/8"
404mm
47 1/8"
1198mm
37 5/8"
957mm
37 1/2"
954mm
37 1/4"
946mm
17 3/8"
442mm
18"
459mm
26 1/4"
667mm
29 5/8"
752mm
3 3/4"
95mm

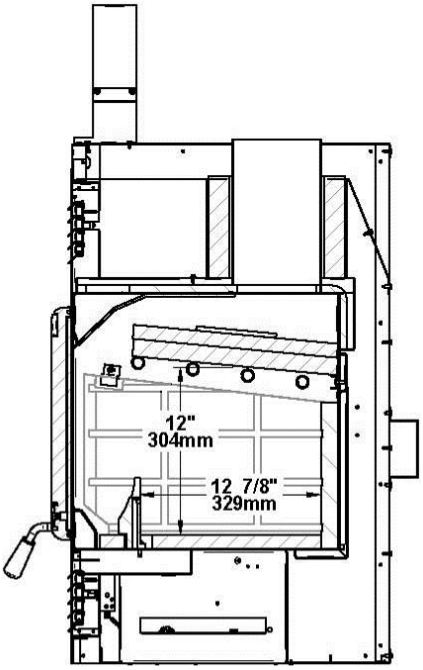
12"
304mm
12 7/8"
329mm

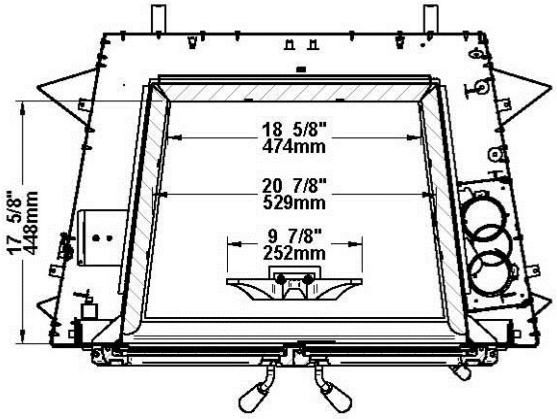
18 5/8"
474mm
20 7/8"
529mm
9 7/8"
252mm
17 5/8"
448mm

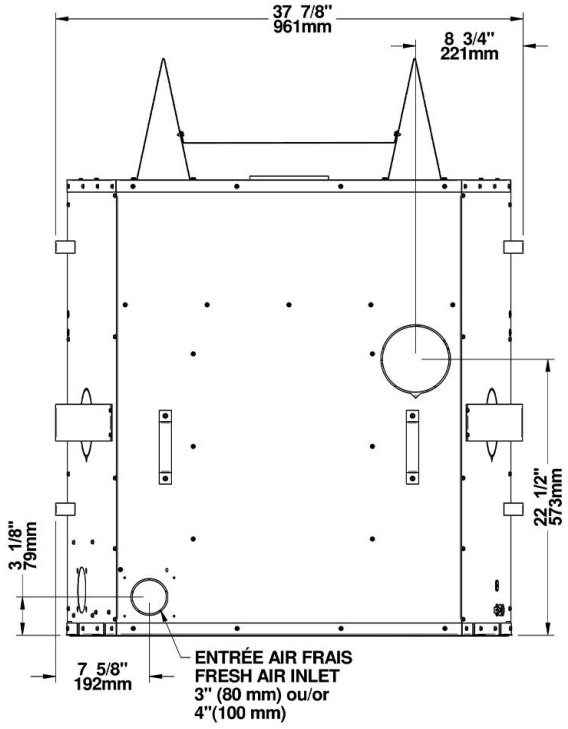
37 7/8"
961mm
8 3/4"
221mm
22 1/2"
573mm
3 1/8"
79mm
7 5/8"
192mm
ENTRÉE AIR FRAIS
FRESH AIR INLET
3" (80 mm) ou/or
4"(100 mm)

2.3 ZONE HEATING AND HOW TO MAKE IT WORK FOR YOU

Your new Stratford wood fireplace is a space heater, which means it is intended to heat the area it is installed in, as well as spaces that connect to that area, although to a lower temperature. This is called zone heating and it is an increasingly popular way to heat homes or spaces within homes.

Zone heating can be used to supplement another heating system by heating a particular space within a home, such as a basement family room or an addition that lacks another heat source.

Houses of moderate size and relatively new construction can be heated with a properly sized and located wood fireplace. Whole house zone heating works best when the fireplace is located in the part of the house where the family spends most of its time. This is normally the main living area where the kitchen, dining and living rooms are located. By locating the fireplace in this area, you will get the maximum benefit of the heat it produces and will achieve the highest possible heating efficiency and comfort. The space where you spend most of your time will be warmest, while bedrooms and basement (if there is one) will stay cooler. In this way, you will burn less wood than with other forms of heating.

Although the fireplace may be able to heat the main living areas of your house to an adequate temperature, we strongly recommend that you also have a conventional oil, gas or electric heating system to provide backup heating.

Your success with zone heating will depend on several factors, including the correct sizing and location of the fireplace, the size, layout and age of your home and your climate zone. Three-season vacation homes can usually be heated with smaller fireplaces than houses that are heated all winter.

2.4 THE BENEFITS OF LOW EMISSIONS AND HIGH EFFICIENCY

The low smoke emissions produced by the special features inside the Stratford firebox mean that your household will release up to 90% less smoke into the outside environment than if you used an older conventional stove. But there is more to the emission control technologies than protecting the environment.

The smoke released from wood when it is heated contains about half of the energy content of the fuel. By burning the wood completely, your fireplace releases all the heat energy from the wood instead of wasting it as smoke up the chimney. Also, the features inside the firebox allow you to reduce the air supply to control heat output, while maintaining clean and efficient flaming combustion, which boosts the efficient delivery of heat to your home.

The emission control and advanced combustion features of your fireplace can only work properly if your fuel is in the correct moisture content range of 15 to 20 percent. See **Section 3: Fuel** of this manual for suggestions on preparing fuelwood and judging its moisture.

2.5 THE SBI COMMITMENT TO YOU AND THE ENVIRONMENT

The SBI team is committed to protecting the environment, so we do everything we can to use only materials in our products that will have no lasting negative impact on the environment.

2.5.1 WHAT IS YOUR NEW FIREPLACE MADE OF?

The body of your fireplace, which is most of its weight, is carbon steel. Should it ever become necessary many years in the future, almost the entire fireplace can be recycled into new products, thus eliminating the need to mine new materials.

The paint coating on your fireplace is very thin. Its VOC content (Volatile Organic Compounds) is very low. VOCs can be responsible for smog, so all the paint used during the manufacturing process meets the latest air quality requirements regarding VOC reduction or elimination.

The air tubes are stainless steel, which can also be recycled.

The C-Cast baffle is made of an aluminosilicate fibre material that is compressed with a binder to form a rigid board. C-Cast can withstand temperatures above 2,000 °F. It is not considered hazardous waste. Disposal at a landfill is recommended.

Moulded refractory bricks are mainly composed of silicon dioxide, also known as silica, a product processed from a mined mineral. It is most commonly found in nature in the form of sand and clay. Disposal at a landfill is recommended. The steel mesh contained in some refractory bricks can be recycled.

The door and glass gaskets are fibreglass which is spun from melted sand. Black gaskets have been dipped into a solvent-free solution. Disposal at a landfill is recommended.

The door glass is a 5-mm thick ceramic material that contains no toxic chemicals. It is made of natural raw materials such as sand and quartz that are combined in such a way to form a high temperature glass. Ceramic glass cannot be recycled in the same way as normal glass, so it should not be disposed of with your regular household products. Disposal at a landfill is recommended.

3 FUEL

3.1 MATERIALS THAT SHOULD NOT BE BURNED

- **GARBAGE OF ANY KIND,**
- **COAL OR CHARCOAL,**
- **TREATED, PAINTED OR COATED WOOD,**
- **PLYWOOD OR PARTICLE BOARD,**
- **FINE PAPER, COLORED PAPER OR CARDBOARD,**
- **SALT WATER DRIFTWOOD,**
- **MANUFACTURED LOGS CONTAINING WAX OR CHEMICAL ADDITIVES,**
- **RAILROAD TIES,**
- **LIQUIDS SUCH AS KEROSENE OR DIESEL FUEL TO START A FIRE.**

3.2 HOW TO PREPARE OR BUY GOOD FIREWOOD

3.2.1 WHAT IS GOOD FIREWOOD?

Good firewood has been cut to the correct length for the fireplace, split to a range of sizes and stacked in the open until its moisture content is reduced to 15 to 20 per cent.

3.2.2 TREE SPECIES

The tree species the firewood is produced from is less important than its moisture content. The main difference in firewood from various tree species is the density of the wood. Hardwoods are denser than softwoods. People who live in the coldest regions of North America usually have only spruce, birch and poplar, other low-density species to burn and yet they can heat their homes successfully.

Homeowners with access to both hardwood and softwood fuel sometimes use both types for different purposes. For example, softer woods make good fuel for relatively mild weather in spring and fall because they light quickly and produce less heat Softwoods are not as dense as hardwoods, so a given volume of wood contains less energy. Using softwoods avoids overheating the house, which can be a common problem with wood heating in moderate weather. Harder woods are best for colder winter weather when more heat and longer burn cycles are desirable.

Note that hardwood trees like oak, maple, ash and beech are slower growing and longer lived than softer woods like poplar and birch. That makes hardwood trees more valuable. The advice that only hardwoods are good to burn is outdated.

Old, leaky cast iron stoves wouldn't hold a fire overnight unless they were fed large pieces of hardwood. That is no longer true. You can successfully heat your home by using the less desirable tree species and give the forest a break at the same time.

3.2.3 LOG LENGTH

Logs should be cut at least 1" (25 mm) shorter than the firebox so they fit in easily. Pieces that are even slightly too long make loading the fireplace very difficult. The most common standard length of firewood is 16"(400 mm).

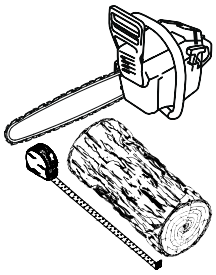

The pieces should be a consistent length, with a maximum of 1" (25 mm) variation from piece to piece.

3.2.4 PIECE SIZE

Firewood dries more quickly when it is split. Large unsplit rounds can take years to dry enough to burn. Even when dried, unsplit logs are difficult to ignite because they don't have the sharp edges where the flames first catch. Logs as small as 3" (75 mm) should be split to encourage drying.

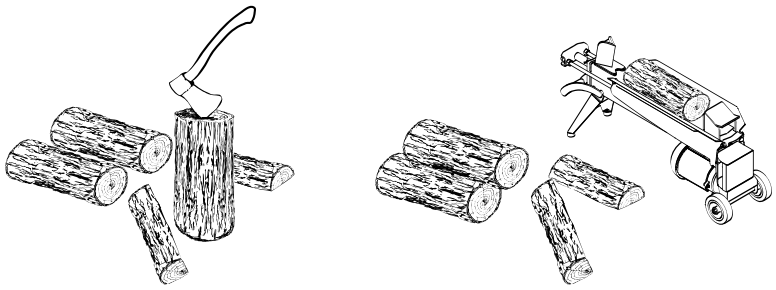

Wood should be split to a range of sizes, from about 3" to 6" (75 mm to 150 mm) in cross section. Having a range of sizes makes starting and rekindling fires much easier. Often, the firewood purchased from commercial suppliers is not split finely enough for convenient stoking. It is sometimes advisable to resplit the wood before stacking to dry.

3.2.5 HOW TO DRY FIREWOOD

Firewood that is not dry enough to burn is the cause of most complaints about wood fireplaces. Continually burning green or unseasoned wood produces more creosote and involves lack of heat and dirty glass door. See **Section 5:** ***Maintaining your wood heating system*** for concerns about creosote.

Here are some things to consider in estimating drying time:

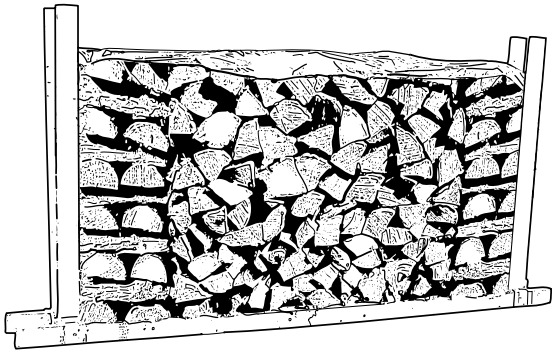

- Firewood takes a long time to dry;
- Firewood bought from a dealer is rarely dry enough to burn, so it is advisable to buy the wood in spring and dry it yourself;
- Drying happens faster in dry weather than in damp, maritime climates;
- Drying happens faster in warm summer weather than in winter weather;
- Small pieces dry more quickly than large pieces;
- Split pieces dry more quickly than unsplit rounds;
- Softwoods take less time to dry than hardwoods;
- Softwoods like pine, spruce, and poplar/aspen can be dry enough to burn after being stacked in the open for only the summer months;
- Hardwoods like oak, maple and ash can take one, or even two years to dry fully, especially if the pieces are big;
- Firewood dries more quickly when stacked in the open where it is exposed to sun and wind; it takes much longer to dry when stacked in a wood shed;
- Firewood that is ready to burn has a moisture content between 15 and 20% by weight and will allow your fireplace to produce its highest possible efficiency.

3.2.6 JUDGING FIREWOOD MOISTURE CONTENT

You can find out if some firewood is dry enough to burn by using these guidelines:

- cracks form at the ends of logs as they dry
- as it dries in the sun, the wood turns from white or cream colored to grey or yellow,
- bang two pieces of wood together; seasoned wood sounds hollow and wet wood sounds dull,
- dry wood is much lighter in weight than wet wood,
- split a piece, and if the fresh face feels warm and dry it is dry enough to burn; if it feels damp, it is too wet,
- burn a piece; wet wood hisses and sizzles in the fire and dry wood does not.

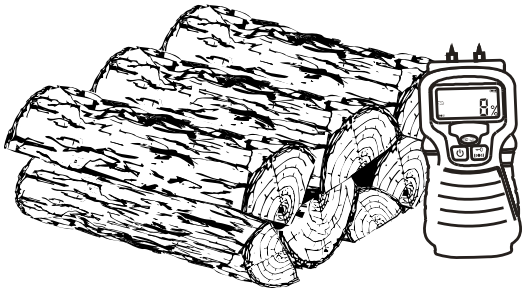

You could buy a wood moisture meter to test your firewood.

3.3 MANUFACTURED LOGS

Do not burn manufactured logs made of wax impregnated sawdust or logs with any chemical additives. Manufactured logs made of 100% compressed sawdust can be burned, but be careful burning too much of these logs at the same time. Start with one manufactured log and see how the fireplace reacts. Never use more than two manufactured logs at a time.

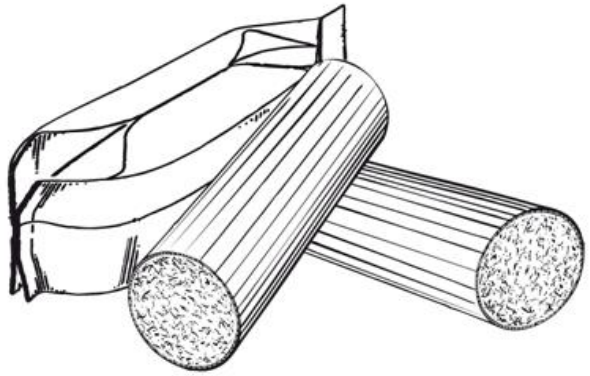

<u>WARNING:</u> DO NOT POKE OR STIR THE LOGS WHILE THEY ARE BURNING. USE ONLY FIRELOGS THAT HAVE BEEN TESTED FOR USE IN FIREPLACES (SEE ULC/ORD-C127, COMPOSITE FIRELOGS) AND PRIOR TO USE, REFER TO FIRELOG WARNINGS AND CAUTIONS MARKINGS ON PACKAGING.

4 OPERATING YOUR FIREPLACE

4.1 THE USE OF A FIRESCREEN

This fireplace has been tested for use with an open door in conjunction with a firescreen (AC01560, sold separately). Make sure the firescreen is properly secured on the fireplace to avoid any risk of sparks damaging your flooring. When the firescreen is in use, do not leave the fireplace unattended so that you can respond promptly in the event of smoke spillage into the room. Potential causes of smoke spillage are described in **Section 8: The Venting System** of this manual. See **Appendix 5: Installing the Firescreen (AC01560)** for installation instructions.

OPERATING WITH THE FIRESCREEN INCREASES THE POSSIBILITY OF GENERATING CARBON MONOXIDE. CARBON MONOXIDE IS AN ODOURLESS GAS THAT IS HIGHLY TOXIC AND WHICH CAN CAUSE DEATH AT HIGH CONCENTRATION IN AIR.

4.2 YOUR FIRST FIRES

Two things will happen as you burn your first few fires; the paint cures and the internal components of the fireplace are conditioned.

As the paint cures, some of the chemicals vaporize. The vapors are not poisonous, but they do smell bad. Fresh paint fumes can also cause false alarms in smoke detectors. So, when you first light your fireplace, be prepared by opening doors and/or windows to ventilate the house. As you burn hotter and hotter fires, more of the painted surfaces reach the curing temperature of the paint. The smell of curing paint does not disappear until you have burned one or two very hot fires.

Burn one or two small fires to begin the curing and conditioning process. Then build bigger and hotter fires until there is no longer any paint smell from the fireplace. Once the paint smell disappears, your fireplace is ready for serious heating.

4.3 LIGHTING FIRES

Each person who heats with wood develops their own favorite way to light fires. Whatever method you choose, your goal should be to get a hot fire burning quickly. A fire that starts fast produces less smoke and deposits less creosote in the chimney. Here are three popular and effective ways to start wood fires.

4.3.1 CONVENTIONAL FIRE STARTING

The conventional way to build a wood fire is to bunch up 5 to 10 sheets of plain newspaper and place them in the firebox. Next, place 10 or so pieces of fine kindling on the newspaper. This kindling should be very thin; less than 1" (25 mm). Next, place some larger kindling pieces on the fine kindling. Open the air control fully and light the newspaper. If you have a tall, straight venting system you should be able to close the door immediately and the fire will ignite. Once the fire has ignited, close the door and leave the air control fully open.

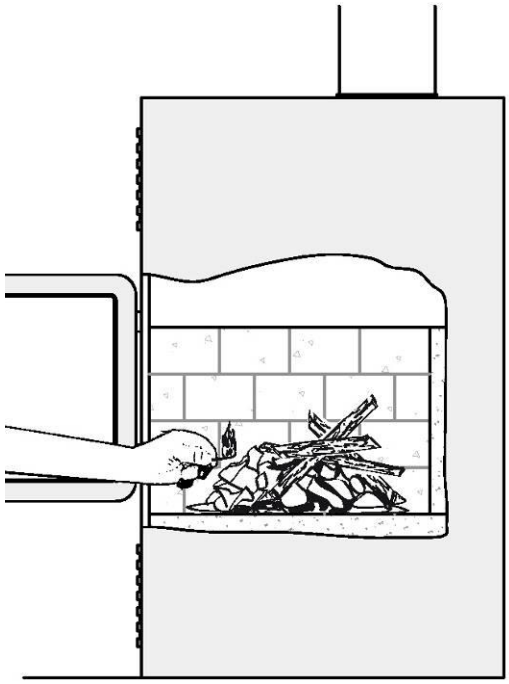

A conventional kindling fire with paper under finely split wood.

DO NOT LEAVE THE FIREPLACE UNATTENDED WHEN THE DOOR IS SLIGHTLY OPENED. ALWAYS CLOSE AND LATCH THE DOOR AFTER THE FIRE IGNITES.

After the kindling fire has mostly burned, you can add standard firewood pieces until you have a fire of the right size for the conditions.

CAUTION: PLACE THE WOOD LOGS FAR ENOUGH FROM THE GLASS TO ALLOW PROPER AIR FLOW

4.3.2 THE TOP DOWN FIRE

The top down fire method solves two problems with the conventional method: first, it does not collapse and smother itself as it burns; and second, it is not necessary to build up the fire gradually because the firebox is loaded before the fire is lit. A top down fire can provide up to two hours of heating or more. The top down method only works properly if the wood is well-seasoned.

Start by placing three or four full-sized split pieces of dry firewood in the firebox. Next, place 4 or 5 more finely split pieces of firewood (2" to 3" [50 mm to 75 mm] in dia.) on the base logs at right angles (log cabin style). Now place about 10 pieces of finely split kindling on the second layer at right angles.

The fire is topped with about 5 sheets of newspaper. You can just bunch them up and stuff them in between the kindling and the underside of the baffle. Or you can make newspaper knots by rolling up single sheets corner to corner and tying a knot in them. The advantage of knots is that they don't roll off the fire as they burn. Light the newspaper and watch as the fire burns from top to bottom.

4.3.3 TWO PARALLEL LOGS

Place two spit logs in the firebox. Place a few sheets of twisted newspaper between the logs. Now place some fine kindling across the two logs and some larger kindling across those, log cabin style. Light the newspaper.

4.3.4 USING FIRE STARTERS

Many people like to use commercial fire starters instead of newspaper. Some of these starters are made of sawdust and wax and others are specialized flammable solid chemicals. Follow the package directions for use.

Gel starter may be used but only if there are no hot embers present. Use only in a cold firebox to start a fire.

DO NOT USE FLAMMABLE LIQUIDS SUCH AS GASOLINE, NAPHTHA, FUEL OIL, MOTOR OIL, OR AEROSOLS TO START OR REKINDLE THE FIRE.

4.4 MAINTAINING WOOD FIRES

4.4.1 GENERAL ADVICE

Wood heating with a space heater is very different than other forms of heating. There will be variations in the temperature in different parts of the house and there will be variations in temperature throughout the day and night. This is normal, and for experienced wood burners these are advantages of zone heating with wood.

Do not expect steady heat output from your fireplace. It is normal for its surface temperature to rise after a new load of wood is ignited and for its temperature to gradually decline as the fire progresses. This rising and falling of temperature can be matched to your household routines. For example, the area temperature can be cooler when you are active, such as when doing housework or cooking, and it can be warmer when you are inactive, such as when reading or watching television.

Wood burns best in cycles. A cycle starts when a new load of wood is ignited by hot coals and ends when that load has been consumed down to a bed of charcoal about the same size as it was when the wood was loaded. Do not attempt to produce a steady heat output by placing a single log on the fire at regular intervals. Always place at least three, and preferably more, pieces on the fire at a time so that the heat radiated from one piece helps to ignite the pieces next to it. Each load of wood should provide several hours of heating. The size of each load can be matched to the amount of heat needed.

When you burn in cycles, you rarely need to open the fireplace's loading door while the wood is flaming. This is an advantage because there is more chance that smoke will leak from the fireplace when the door is opened as a full fire is burning.

IF YOU MUST OPEN THE DOOR WHILE THE FUEL IS FLAMING, OPEN THE AIR CONTROL FULLY FOR A FEW MINUTES, THEN UNLATCH AND OPEN THE DOOR SLOWLY.

4.4.2 ASH REMOVAL

Ash should be removed from the firebox every two or three days of full time heating. Do not let the ash build up in the firebox because it will interfere with proper fire management.

The best time to remove ash is after an overnight fire when the fireplace is relatively cool, but there is still some chimney draft to draw the ash dust into the fireplace and prevent it from coming into the room.

After ashes have been removed from the fireplace and placed in a tightly covered metal container, they should be taken outside immediately. The closed container of ashes should be placed on a non-combustible floor or on the ground well away from all combustible materials pending final disposal. Ashes normally contain some live charcoal that can stay hot for several days. If the ashes are disposed of by burial in soil or otherwise locally dispersed, they should be retained in the closed container until all cinders have thoroughly cooled. Other waste should not be placed in this container.

NEVER STORE ASHES INDOORS OR IN A NON-METALIC CONTAINER OR ON A WOODEN DECK.

4.4.3 RAKING CHARCOAL

Rekindle the fire when you notice that the room temperature has fallen. You will find most of the remaining charcoal at the back of the firebox, furthest from the door. Rake these coals towards the door before loading. There are two reasons for this raking of the coals. First, it concentrates them near where most of the combustion air enters the firebox and where they can ignite the new load quickly, and second, the charcoal will not be smothered by the new load of wood. If you were to simply spread the charcoal out, the new load will smoulder for a long time before igniting.

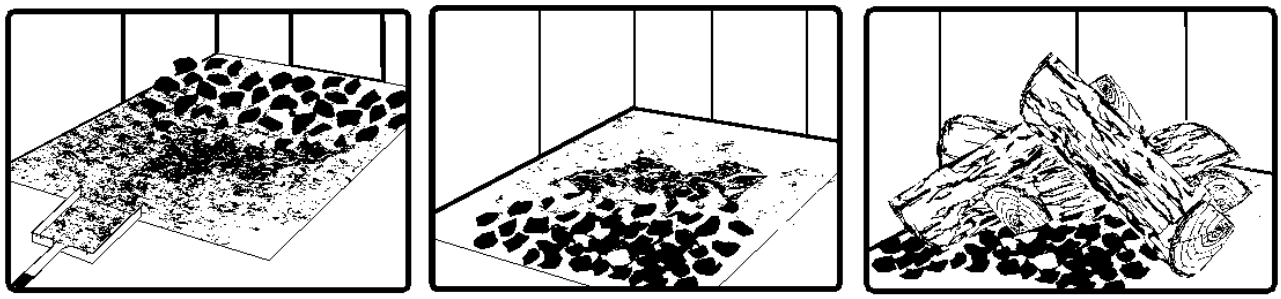

Remove ash first, and then rake charcoal towards the front of the firebox before loading so that it will ignite the new load.

4.4.4 FIRING EACH NEW LOAD HOT

Place the new load of wood on and behind the charcoal, and not too close to the glass. Close the door and open the air control fully. Leave the air control fully open until the firebox is full of flames, the wood has charred to black and its edges are glowing red. Firing each load of wood hot accomplishes a few things:

- drives the surface moisture from the wood,
- creates a layer of char on the wood, which slows down its release of smoke,
- heats the firebox components so they reflect heat back to the fire, and
- heats the chimney so it can produce strong, steady draft for the rest of the cycle.

Although it is important to fire each new load hot to prepare for a clean burn, do not allow the fire to burn at full intensity for more than a few minutes.

DO NOT LEAVE THE FIREPLACE UNATTENDED WHILE A NEW LOAD IS BEING FIRED HOT.

DO NOT OVERFIRE.

When you burn a new load of wood hot to heat up the wood, the fireplace and the chimney, the result will be a surge of heat from the fireplace. This heat surge is welcome when the room temperature is a little lower than desirable, but not welcome if the space is already warm. Therefore, allow each load of wood to burn down so that the space begins to cool off a little before loading. Letting the space cool before loading is one of the secrets to clean burning and effective zone heating.

4.4.5 TURNING DOWN THE AIR SUPPLY

Once the firewood, firebox and chimney are hot, you can begin to reduce the air supply for a steady burn.

As you reduce the air supply to the fire, two important things happen. First, the firing rate slows down to spread the heat energy in the fuel over a longer period of time. Second, the flow rate of exhaust through the fireplace and flue pipe slows down, which gives more time for the transfer of heat from the exhaust.

You will notice that as you reduce the air setting, the flames slow down. This is your indication that the fireplace is burning at its peak efficiency.

If the flames get small and almost disappear when you turn down the air, you have turned down the air too early, or your firewood is wetter than it should be. With good fuel and correct air control use, the flames should slow down, but should stay large and steady, even as the air supply is reduced.

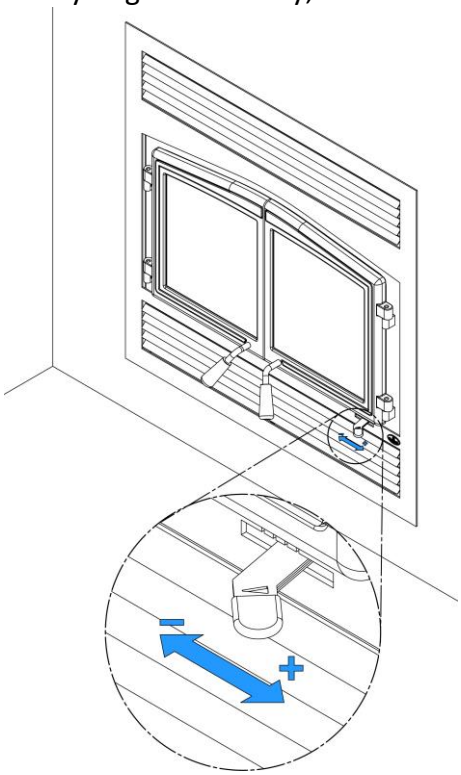

4.4.6 BUILDING DIFFERENT FIRES FOR DIVERSE NEEDS

Using the air control is not the only way to match the fireplace's heat output to the heat demand. Your house will need far less heat in October than in January to be kept at a comfortable temperature. If you fill the firebox full in fall weather, you will either overheat the space or turn the fireplace down so much that the fire will be smoky and inefficient. Here are some suggestions for building fires to match different heat demand.

4.4.6.1 Small Fires to Take the Chill Off the House

To build a small fire that will produce a low heat output, use small pieces of firewood and load them crisscross in the firebox. The pieces should be only 3" to 4" in diameter. After raking the coals, you can lay two pieces parallel to each other corner to corner in the firebox and lay two more across them in the other direction. Open the air control fully and only reduce the air after the wood is fully flaming. This kind of fire is good for mild weather when you are around to tend the fireplace and should provide enough heat for four hours or more. Small fires like this are a good time to use softer wood species so there will be less chance of overheating the house.

4.4.6.2 Long Lasting Low Output Fires

Sometimes you will want to build a fire to last up to eight hours, but don't need intense heat. In this case use soft wood species and place the logs compactly in the firebox so the pieces are packed tightly together. You will need to fire the load hot for long enough to fully char the log surfaces before you can turn the air down. Make sure the fire is flaming brightly before leaving the fire to burn.

4.4.6.3 High Output Fires for Cold Weather

When the heat demand is high during cold weather, you'll need a fire that burns steadily and brightly. This is the time to use larger pieces of hardwood fuel if you have it. Put the biggest pieces at the back of the firebox and place the rest of the pieces compactly. A densely built fire like this will produce the longest burn your fireplace is capable of.

You will need to be cautious when building fires like this because if the air is turned down too much, the fire could smoulder. Make sure the wood is flaming brightly before leaving the fire to burn.

4.4.6.4 Maximum Burn Cycle Times

The burn cycle time is the period between loading wood on a coal bed and the consumption of that wood back to a coal bed of the same size. The flaming phase of the fire lasts for roughly the first half of the burn cycle and the second half is the coal bed phase during which there is little or no flame. The length of burn you can expect from your fireplace, including both the flaming and coal bed phases, will be affected by a number of things, such as:

- Firebox size,
- The amount of wood loaded,
- The species of wood you burn,
- The wood moisture content,
- The size of the space to be heated,
- The climate zone you live in, and
- The time of year.

The table below provides a very general indication of the maximum burn cycle times you are likely to experience, based on firebox volume.

FIREBOX VOLUME	MAXIMUM BURN TIME
<1.5 cubic feet	3 to 5 hours
1.5 c.f. to 2.0 c.f.	5 to 6 hours
2.0 c.f. to 2.5 c.f.	6 to 8 hours
2.5 c.f. to 3.0 c.f.	8 to 9 hours
>3.0 c.f.	9 to 10 hours

Long burn times are not necessarily an indication of efficient fireplace operation. When you are home during the day and able to tend the fire, it is preferable to build a smaller fire that might provide three or four hours of heating than to fully load the firebox for a much longer burn. Shorter burn cycles make it easier to match the heat output of the fireplace to the heat demand of the space.

4.4.6.5 How to place the logs

In fireboxes that are roughly square, wood can be loaded so that looking through the glass door you see the ends of the logs (north-south) or the sides of the logs (east-west). In all cases, wood should always be placed behind the andirons.

East-west loads that are built compactly break down slowly when heated, but the amount of wood you can load is limited because if you put in too many pieces, one may fall against the glass. East-west loads are excellent for long, low output fires for relatively mild weather.

North-south loads break down more quickly, but much more wood can be loaded at a time. This makes north-south loading good for high output, long lasting fires for cold weather.

5 MAINTAINING YOUR WOOD HEATING SYSTEM

5.1 FIREPLACE MAINTENANCE

Your new fireplace will give many years of reliable service if you use and maintain it correctly. Some of the internal components of the firebox, such as firebricks, baffles and air tubes, will wear over time under intense heat. You should always replace defective parts with original parts (see **Appendix 7: Exploded Diagram and Parts List**). Firing each load hot to begin a cycle as described above will not cause premature deterioration of the fireplace. However, letting the fireplace run with the air control fully open for the entire burn cycles can cause damage over time. The hotter you run the fireplace throughout burn cycles, the more quickly its components will deteriorate. For that reason, **never leave the fireplace unattended while a new load is being fired hot**.

5.1.1 PLATED FINISH MAINTENANCE

If your appliance has a plated finish, use a metal polish and a soft cloth to clean it. Do not use abrasives such as steel wool, steel pads or an abrasive cleaner for they may scratch the finish.

5.1.2 GLASS DOOR CLEANING

Under normal conditions, your door glass should stay relatively clear. If your firewood is dry enough and you follow the operating instructions in this manual, a whitish, dusty deposit will form on the inside of the glass after a week or so of use. This is normal and can be easily removed when the fireplace is cool by wiping with a damp cloth or paper towel and then drying. **Never try to clean the glass when the fireplace is hot.**

In spring and fall when the fireplace is run at lower temperatures, you may see some light brown stains forming, especially at the lower corners of the glass. This indicates that the fire has been smoky and some of the smoke has condensed on the glass. When the weather is mild, you may find that letting the fire go out is better than trying to maintain a continuous fire. Use the technique described above for building a fire to take the chill off the house.

If you do get brown stains on the glass you can remove them with special cleaners for wood heater glass doors. **Do not use abrasives to clean your fireplace's door glass.**

The deposits that form on the glass are the best indication of the quality of your fuel and how well you are doing in operating the fireplace. Your goal should be clear glass with no brown stains. If you continue to see brown stains on the glass, something about your fuel and operating procedure needs to be changed. Stains on the glass indicate incomplete combustion of the wood, which also means more smoke emissions and faster formation of creosote in the chimney.

If you see brown streaks coming from the edge of the glass, it is time to replace the gasket around the glass. Visit your fireplace retailer to get the self-adhesive glass gasket and follow the instructions below for installation.

Do not abuse the glass door by striking or slamming shut. Do not use the fireplace if the glass is broken.

5.1.3 DOOR ADJUSTMENT

In order for your fireplace to burn at its best efficiency, the door must provide a perfect seal with the firebox. Therefore, the gasket should be inspected periodically to check for a good seal. The gasket seal may be improved with a simple latch mechanism adjustment. To adjust:

1. Remove the split pin by pulling and turning it using pliers.

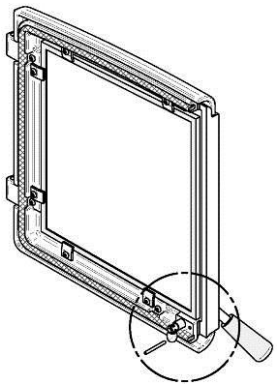

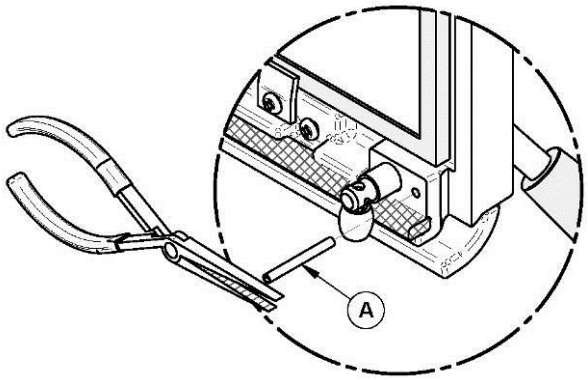

2. Turn the handle counter clock wise one turn to increase pressure. To reduce the pressure, when installing a new gasket for example, turn clock wise.

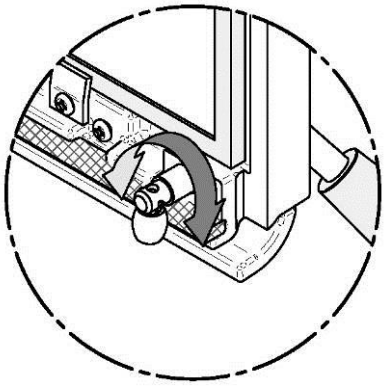

3. Re-install the split pin with a small hammer.

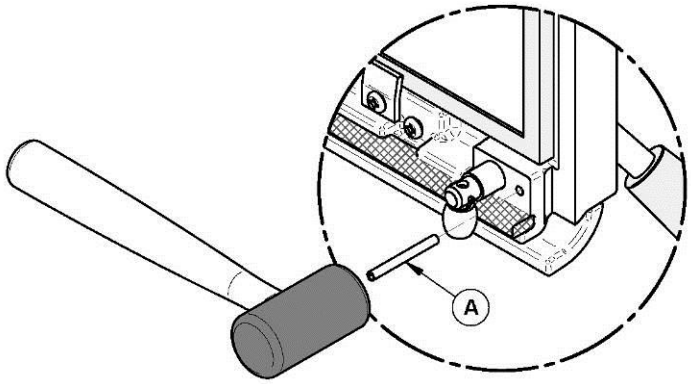

5.1.4 DOOR ALIGNMENT

To align, open the fireplace's doors and loosen the pressures screws located on the lower and upper hinges of each door using a 3/32" Allen key to free the adjustable hinge rods.

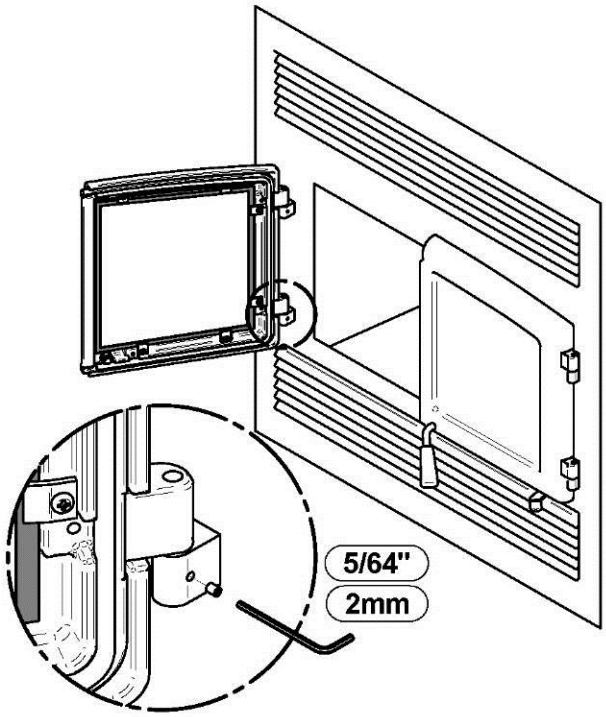

Using a flat screwdriver, turn the adjustable hinge rods in the direction shown to adjust the doors. Tighten all door hinge pressure screws when they are at the desired positions.

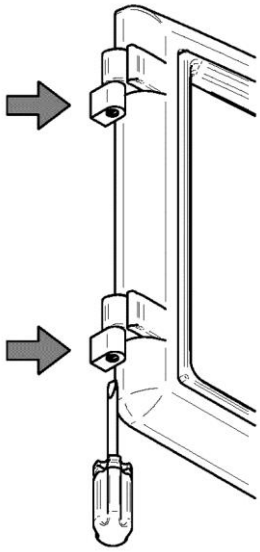

	DOORS POSITION WITH MORE SPACE		DOORS POSITION WITH LESS SPACE		DOORS TILT UP		DOORS TILT DOWN	
	LEFT	RIGHT	LEFT	RIGHT	LEFT	RIGHT	LEFT	RIGHT
TOP PINTLES								
BOTTOM PINTLES								

5.1.5 REPLACING THE DOOR GASKET

It is important to maintain the gaskets in good condition. After a year or more of use, the door gaskets will compress and become hard, which may allow air to leak past it. You can test the condition of the door gaskets by closing and latching the door on a strip of paper. Test all around the door. If the paper slips out easily anywhere, it is time to replace the gaskets.

Use the correct replacement gasket that you can purchase from your retailer. The diameter and density of the gasket is important to getting a good seal.

Place the doors face-down on something soft like a cushion of rags or piece of carpet. Remove the old gaskets from the door by pulling and prying it out with an old screw driver. Then use the screwdriver to scrape the old gasket adhesive from the door. Now run a 1/4” (6 mm) bead of high temperature silicone in the door frame gasket **(A)** groove of the door gasket. Starting from the middle of the hinge side, press the gasket into the groove. Do not stretch the gasket as you place it. Leave the gasket about 1/2” long when you cut it and press the end into the groove. Tuck any loose fibres under the gasket and into the silicone. Do the same for center door gaskets **(B)**. Repeat for the second door. Close the door and do not use the fireplace for 24 hours.

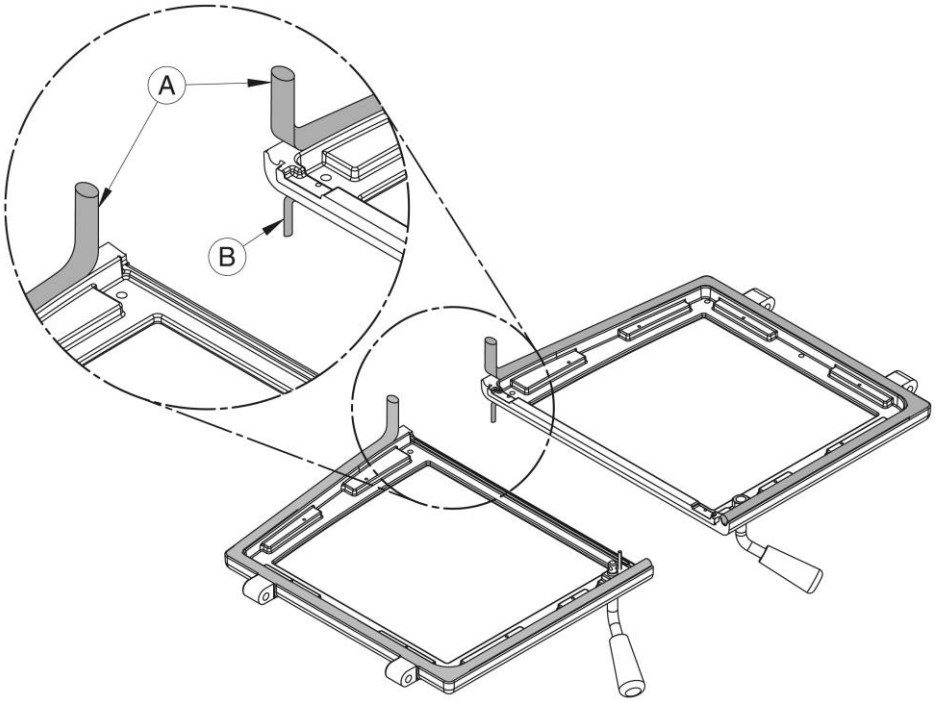

Location	Length	Dimensions
On each door frame **(A)**	43 ½" (110 cm)	Round ½" (12mm)
Center door gasket **(B)**	15 ½” (39,5 cm)	Round ¼" (6 mm) self-adhesive

5.1.6 REPLACING THE GLASS GASKET AND/OR THE GLASS

It is a good idea to replace the glass gasket when the door gasket is replaced. The gasket is flat, adhesive-backed, woven fibreglass. Remove the glass retaining screws (A) and clips (B) then the metal frames (C) that hold the glass (D) to the door frame (E). Lift out the glass (D) and pull off the old gasket. Do the same for the other door. This is a good time to clean the glass thoroughly.

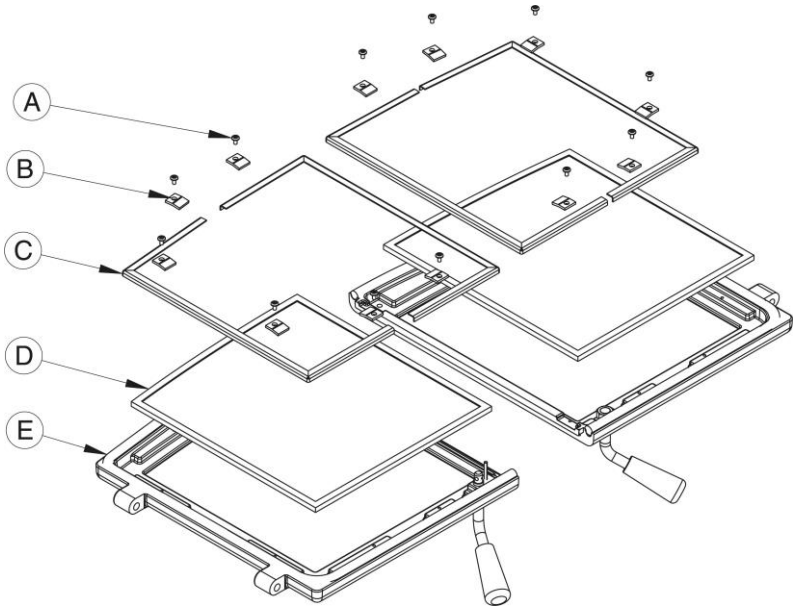

The gasket must be centred on the edge of the glass. To do this easily, peel back a section of the paper covering the adhesive and place the gasket on a table with the adhesive side up. Stick the end of the gasket to the middle of one edge, then press the edge of the glass down onto the gasket, taking care that it is perfectly centred on the gasket. Peel off more of the backing and rotate the glass and press the next section onto the gasket. Do not stretch the gasket as you place it. Continue until you get to the start and trim the gasket to length. Now pinch the gasket to the glass in a U shape, all around the glass. Reinstall the glass, being careful to centre the glass carefully in the door. Do not over-tighten the screws. Note that the two main causes of broken door glass are uneven placement in the door and over-tightening of retaining screws.

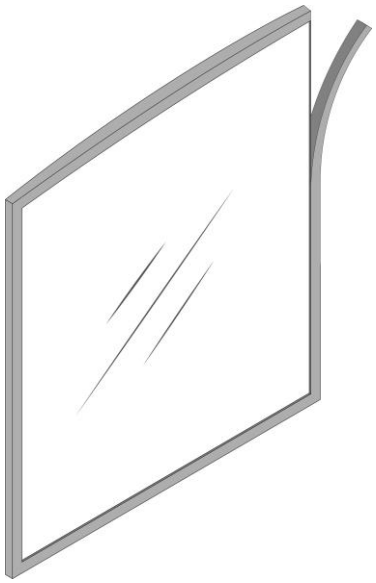

Location	Length	Dimension
Around each glass	51 ½" (131 cm)	“U” shaped

Do not abuse the glass door by striking or slamming shut. Do not use the fireplace if the glass is broken. To change the glass, perform the same operation described above.

Both glasses used in the Stratford are 5 mm thick of dimension: 12 3/16" x 13 1/2" and tested to reach temperatures up to 1400º F. If the glass breaks, it must be replaced with one having the same specification. Contact your OSBURN dealer to obtain a genuine replacement part.

WARNING: TEMPERED GLASS OR ORDINARY GLASS WILL NOT WITHSTAND THE HIGH TEMPERATURES OF THE STRATFORD.

5.1.7 CLEANING AND PAINTING THE FIREPLACE

Do not attempt to clean or paint the fireplace when the unit is hot. Painted surfaces can be wiped down with a damp cloth. Plated surfaces may be scratched by abrasive cleaners. To maintain the finish at its original brilliance, use only a damp soft cloth to clean plated surfaces.

If the paint becomes scratched or damaged, you can give your wood fireplace a brand new look by repainting it with heat-resistant paint. Before painting, roughen the surface with fine sand paper, wipe it down to remove dust, and apply two thin coats of paint. For best results, use the same paint that was originally used on the fireplace, which is available in spray cans. See your dealer for details.

5.2 CHIMNEY AND CHIMNEY LINER MAINTENANCE

5.2.1 WHY CHIMNEY CLEANING IS NECESSARY

Wood smoke can condense inside the chimney liner and chimney, forming a combustible deposit called creosote. If creosote is allowed to build up in the venting system, it can ignite when a hot fire is burned in the fireplace and a very hot fire can progress to the top of the chimney. Severe chimney fires can damage even the best chimneys. Smouldering, smoky fires can quickly cause a thick layer of creosote to form. When you avoid smouldering so the exhaust from the chimney is mostly clear, creosote builds up more slowly. Your new fireplace has the right characteristics to help you to burn clean fires with little or no smoke, resulting in less creosote in the chimney.

5.2.2 HOW OFTEN SHOULD YOU CLEAN THE CHIMNEY?

It is not possible to predict how much or how quickly creosote will form in your chimney. It is important, therefore, to check the build-up in your chimney monthly when getting used to the new fireplace until you determine the rate of creosote formation. Even if creosote forms slowly in your system, the chimney should be cleaned and inspected at least once each year. Do not allow more than 1/8″ (3 mm) creosote buildup in the chimney.

It is recommended to clean thoroughly the chimney system at the end of every heating season. During summer, the air is damper and with minimal air circulation within the stove or furnace, it can mix with creosote and/or sooth deposits in the chimney system to form an acid that could accelerate the corrosion process and induce premature decay of the steel. Corrosion damages are not covered under warranty. Have your chimney system cleaned by a professional chimney sweep. Use a plastic or steel brush.

Contact your local municipal or provincial fire authority for information on how to handle a chimney fire. Have a clearly understood plan to handle a chimney fire.

5.2.3 CLEANING THE CHIMNEY

Chimney cleaning can be a difficult and dangerous job. If you don't have experience cleaning chimneys, you might want to hire a professional chimney sweep to clean and inspect the system for the first time. After having seen the cleaning process, you can decide if it is a job you would like to take on.

The most common equipment used are fibreglass rods with threaded fittings and stiff plastic brushes. The brush is forced up and down inside the chimney flue to scrub off the creosote.

The chimney should be checked regularly for creosote build-up. Inspection and cleaning of the chimney can be facilitated by removing the baffle.

Do not expect chemical cleaners to keep your chimney clean.

The rain cap can be removed for inspection and/or cleaning of the chimney.

The chimney should be swept following these steps:

1) Remove the fire baffle and air tubes.
2) Remove the rain cap.
3) Sweep the chimney.
4) Clean the inside of the firebox.
5) Re-install the baffle, the air tubes and the rain cap.

<u>CAUTION</u>: OPERATION OF YOUR STRATFORD WITHOUT THE BAFFLE MAY CAUSE UNSAFE AND HAZARDOUS TEMPERATURE CONDITIONS AND WILL VOID THE WARRANTY.

5.2.4 FIRE BAFFLE REMOVAL PRIOR TO CLEANING THE CHIMNEY

Before starting to clean your chimney, we recommend that you remove the fire baffle to avoid creosote dust collection on top of the baffle. Follow the steps below to remove the fire baffle:

1. Remove the front air tube by pulling out the cutter pin on the side of the tube. They are located at the top, underneath the baffle.

2. Lift the baffle assembly and slide it out of the fireplace. You now have access to the chimney.

See **Appendix 6: *Installation of Secondary Air Tubes and Baffle*** for details.

5.2.5 CHIMNEY FIRE

Regular chimney maintenance and inspection can prevent chimney fires. If you have a chimney fire, follow these steps:

1. Close the fireplace door and the air intake controls;

2. Alert your family of the possible danger;

3. If you require assistance, alert your fire department;

4. If possible, use a dry chemical fire extinguisher, baking soda or sand to control the fire. Do not use water as it may cause a dangerous steam explosion;

5. Check outside to ensure that sparks and hot embers coming out of the chimney are not igniting the roof;

6. Do not use the fireplace again until your chimney and fireplace have been inspected by a qualified chimney sweep or a Fire Department Inspector.

PART B – INSTALLATION

Install the fireplace only as described in these instructions and using only components from the chimney manufacturers listed in table 2.

Parts Required

- Stratford Fireplace
- Insulated chimney made by the manufacturers listed in table 2, with the corresponding specifications:
  - Chimney lengths
  - Elbows (where necessary)
  - Associated components as per these installation instructions

Additional Equipment (optional)

- Forced air distribution kit
- Hot air gravity distribution kit
- Fresh air intake kit
- Fire screen

SUMMARY OF INSTALLATION CAUTIONS AND WARNINGS

- **THE INFORMATION GIVEN ON THE CERTIFICATION LABEL AFFIXED TO THE APPLIANCE ALWAYS OVERRIDES THE INFORMATION PUBLISHED, IN ANY OTHER MEDIA (OWNER'S MANUAL, CATALOGUES, FLYERS, MAGAZINES AND/OR WEB SITES).**
- **MIXING OF APPLIANCE COMPONENTS FROM DIFFERENT SOURCES OR MODIFYING COMPONENTS MAY RESULT IN HAZARDOUS CONDTIONS. WHERE ANY SUCH CHANGES ARE PLANNED, STOVE BUILDER INTERNATIONAL INC. SHOULD BE CONTACTED IN ADVANCE.**
- **ANY MODIFICATION OF THE APPLIANCE THAT HAS NOT BEEN APPROVED IN WRITING BY THE TESTING AUTHORITY VIOLATES CSA B365 (CANADA), AND ANSI NFPA 211 (USA).**
- **CONNECTION BETWEEN A 2100 INSULATED CHIMNEY AND A LISTED STAINLESS STEEL CHIMNEY LINER IS ALLOWED IF A LISTED CONNECTOR IS USED. FOLLOW INSTRUCTIONS IN SECTION 9.9 FOR THAT KIND OF INSTALLATION.**
- **IF REQUIRED, A SUPPLY OF COMBUSTION AIR SHALL BE PROVIDED TO THE ROOM.**
- **DO NOT CONNECT TO OR USE IN CONJUNCTION WITH ANY AIR DISTRIBUTION DUCTWORK UNLESS SPECIFICALLY APPROVED FOR SUCH INSTALLATION.**
- **DO NOT CONNECT THIS UNIT TO A CHIMNEY FLUE SERVING ANOTHER APPLIANCE.**
- **THIS FIREPLACE HAS NOT BEEN TESTED TO BE INSTALLED IN A MOBILE HOME.**
- **THIS FIREPLACE HAS NOT BEEN TESTED TO BE INSTALLED INSIDE A MASONRY CHIMNEY.**

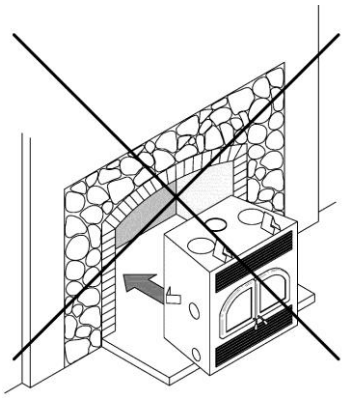

REGULATIONS COVERING FIREPLACE INSTALLATION

When installed and operated as described in these instructions, the Stratford wood fireplace is suitable for use in residential installations. The Stratford wood fireplace is not intended for installation in a bedroom of a mobile home.

In Canada, the CSA B365 Installation Code for Solid Fuel Burning Appliances and Equipment and the CSA C22.1 Canadian National Electrical Code are to be followed in the absence of local code requirements. In the USA, the ANSI NFPA 211 Standard for Chimneys, Fireplaces, Vents and Solid Fuel-Burning Appliances and the ANSI NFPA 70 National Electrical Code are to be followed in the absence of local code requirements.

NOTE: The Fireplace is not approved for use with a so-called "positive flue connection" to the clay tile of a masonry chimney.

6 FIREPLACE INSTALLATION

6.1 STANDOFF INSTALLATION

BEFORE INSTALLING YOUR FIREPLACE, YOU MUST INSTALL THE TWO SPACERS AND THE HEAT SHIELD ON TOP AND THE TWO SPACERS ON THE BACK OF THE FIREPLACE.

The spacers and the heat shield are in the firebox of the fireplace and the screws are with the manual kit. Using the screws provided, install the two spacers (A) and the heat shield (B) on top of the fireplace and the two spacers (C) on the back of it.

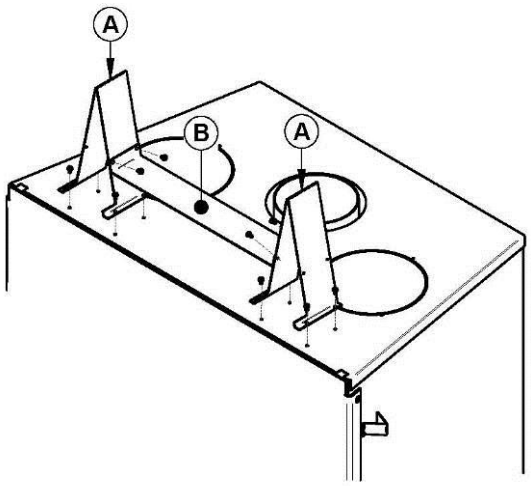

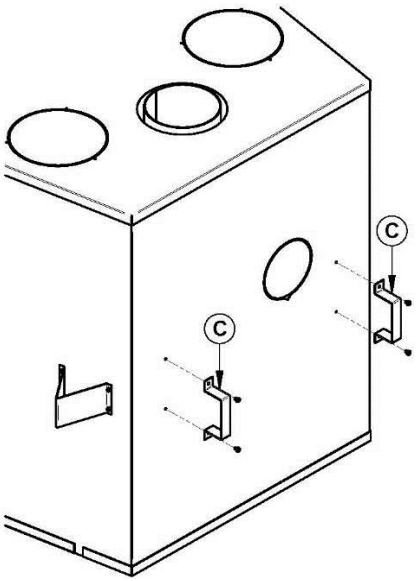

6.2 LOCATING THE STRATFORD

A. The best location to install your fireplace is determined by considering the location of windows, doors, and the traffic flow in the room. Figure some space in front of the unit for the hearth extension and the mantel and taking into consideration the location of the heat distribution systems (optional), fresh air intake kit and chimney. If possible, you should choose a location where the chimney will pass through the house without cutting floor or roof rafters.

B. Usually, no additional floor support is needed for the fireplace. The adequacy of the floor can be checked by first estimating the weight of the fireplace system. Weight is given in **Section 2.1: *Stratford Specifications***. Next, measure the area occupied by the fireplace, note the floor construction and consult your local building code to determine if additional support is needed.

6.2.1 RAISED BASE INSTALLATION OF MORE THAN 4" (R VALUE FOR THE HEARTH EXTENSION NOT REQUIRED)

The Stratford may be installed directly on the floor or on a raised combustible or non combustible base. If the fireplace is elevated more than 4" (**B**), an R value for the hearth extension is not required. However, the upper and lower angle, for the full width of the floor protection, must be protected 2" horizontally and vertically (**E**) by a non-combustible material. For example, a sheet metal (not included). Apart from these two corners, the sheet metal does not have to cover the rest of the wall between the base of the fireplace and the floor.

Note that the non-combustible hearth extension floor area must extend at least 16" (41 cm) in front of the hearth as shown in **Section 6.3.2: *Minimum Hearth Extension Requirements***.

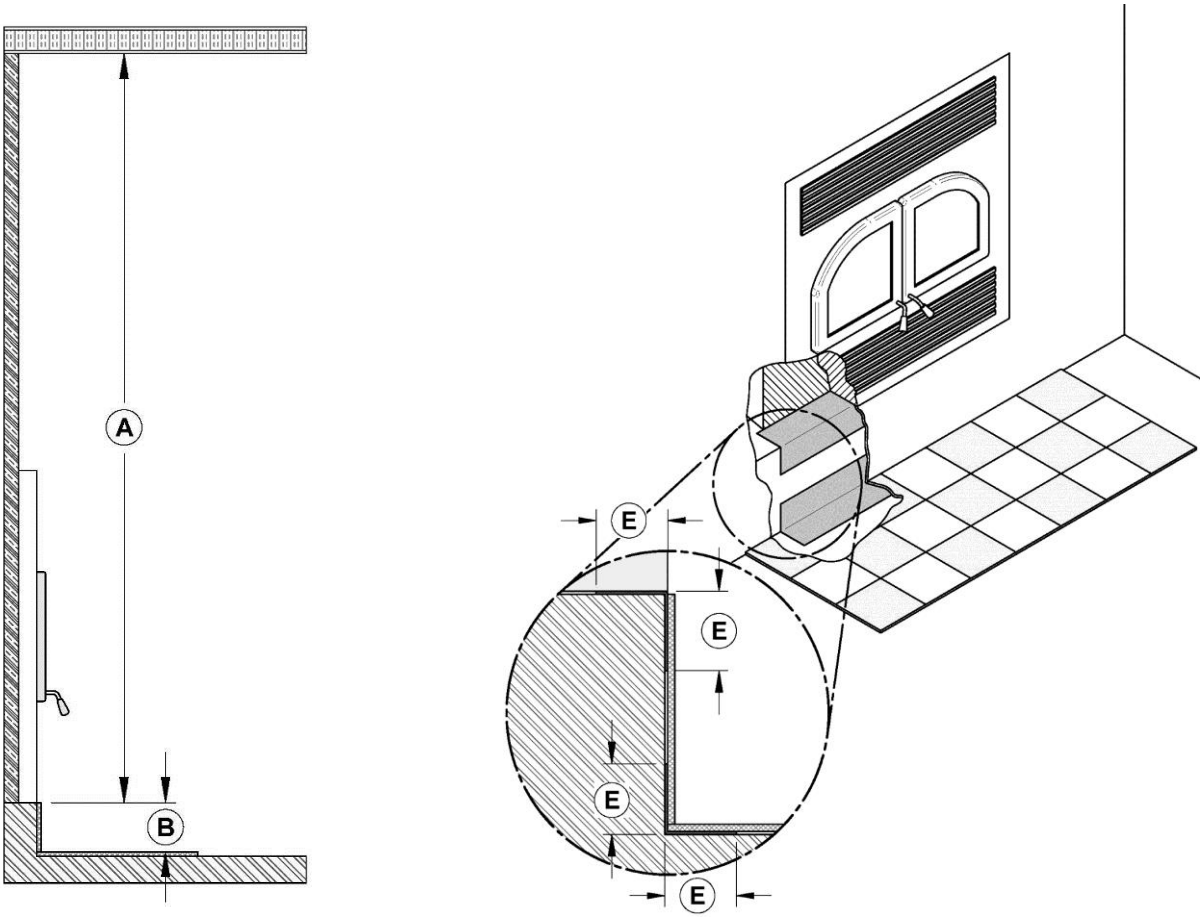

	CLEARANCES	MINIMUM MEASUREMENT	
A	80" (2032 mm)	**E**	2" (51 mm)
B	4" (102 mm) minimum		

In the case where (**F**) would be equal to 4", it is suggested that the sheet metal between the base of the fireplace and floor be in one piece.

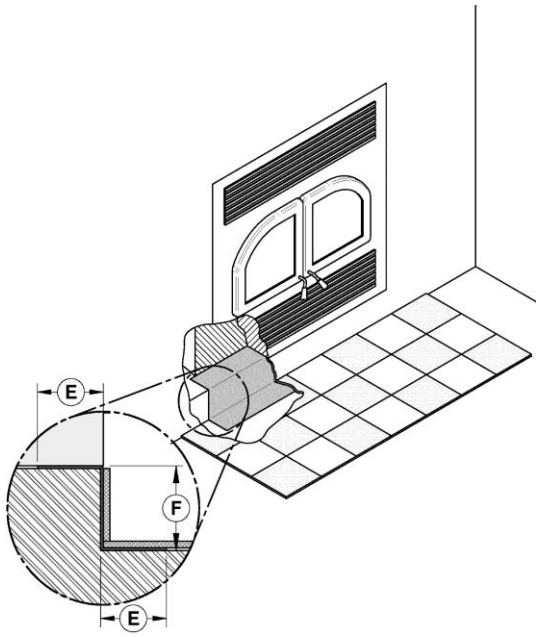

6.2.2 ON THE FLOOR OR ON A RAISED BASE OF LESS THAN 4" INSTALLATION (R VALUE FOR THE HEARTH EXTENSION REQUIRED)

In the case where the fireplace is installed directly on the floor or on a raised base of less than 4", an R value for the hearth extension is required. In these cases also, the joint between the hearth extension and the fireplace (**E**) must be protected by a non-combustible material. For example, a sheet metal (not included).

Note that the floor under of the fireplace should match or exceed the height of the floor protection.

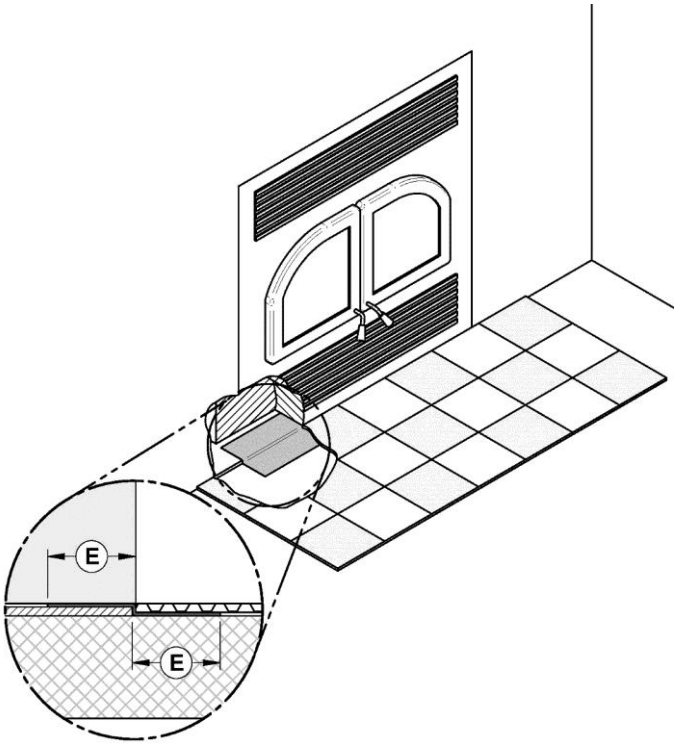

	MINIMUM MEASUREMENT
E	2" (51 mm)

A noncombustible floor protection with R value insulation equal to or greater than 1.00 must be installed in front of the unit. For more details see **Section 6.2.2: *Minimum Hearth Extension Requirements***. The use of an R value is convenient when more than one material is going to be used in the hearth extension to cover the combustible surface. This is because R values are additive, whereas K values are not. To find the corresponding R factor to use for some selected materials, please see **Thermal Characteristics of Common Floor Protection Materials** table.

CAUTION: DO NOT LEAVE CARPET UNDER THE FLOOR PROTECTION IN FRONT OF THE FIREPLACE

6.2.3 R CALCULATIONS

There are two ways to calculate the R factor of the floor protection. First, by adding the R-values of the proposed materials or if some K and thickness values are given, by converting them to R values.

To calculate the R factor for a composite floor protection made of a combination of alternative materials, simply add the R-values of those materials. If the result is equal to or larger than the required R value, the combination is acceptable. For R-values of some selected materials, see Appendix section.

Example:

Required floor protection R of 1.00. Proposed materials: four inches of brick and one inch of Durock® board:

Four inches of brick
(R = 4 x 0.2 = 0,8) plus 1 inch of Durock® (R = 1 x 0.52 = 0.52).

0.8 + 0.52 = 1.32.

This R value is larger than the required 1.00 and is therefore **acceptable**

In the case of a known K and thickness of alternative materials to be used in combination, convert all K values to R by dividing the thickness of each material by its K value. Add the R values of your proposed materials as shown in the previous example.

Example:

K value = 0.75

Thickness = 1

R value = Thickness/K = 1/0.75 = 1.33

Thermal Characteristics of Common Floor Protection Materials*

MATERIAL	CONDUCTIVITY (k) PER INCH	RESISTANCE (R) PER INCH THICKNESS
Micore® 160	0.39	2.54
Micore® 300	0.49	2.06
Durock®	1.92	0.52
Hardibacker®	1.95	0.51
Hardibacker® 500	2.3	0.44
Wonderboard®	3.23	0.31
Cement mortar	5.00	0.2
Common brick	5.00	0.2
Face brick	9.00	0.11
Marble	14.3 – 20.00	0.07 – 0.05
Ceramic tile	12.5	0.008
Concrete	1.050	0.950
Mineral wool insulation	0.320	3.120
Limestone	6.5	0.153
Ceramic board (Fibremax)	0.450	2.2
Horizontal still air** (1/8")	0.135	0,920**

* Information as reported by manufacturers and other resources.

** For a 1/8" thickness. You cannot «stack» horizontal still air to accumulate R-values; you must separate each layer of horizontal still air with another non-combustible material.

6.2.4 MINIMUM HEARTH EXTENSION REQUIREMENTS

The hearth extension floor area must extend at least 16" (41 cm) in front of the hearth **(A)** and at least 8" (20 cm) on each side of the door opening (**D**). The joint between the hearth extension and the fireplace hearth needs to be made of non-combustible material such as sheet metal (not included).

	CLEARANCES
A	16" (406 mm)
B	41.5" (1054 mm)
C	8" (203 mm)

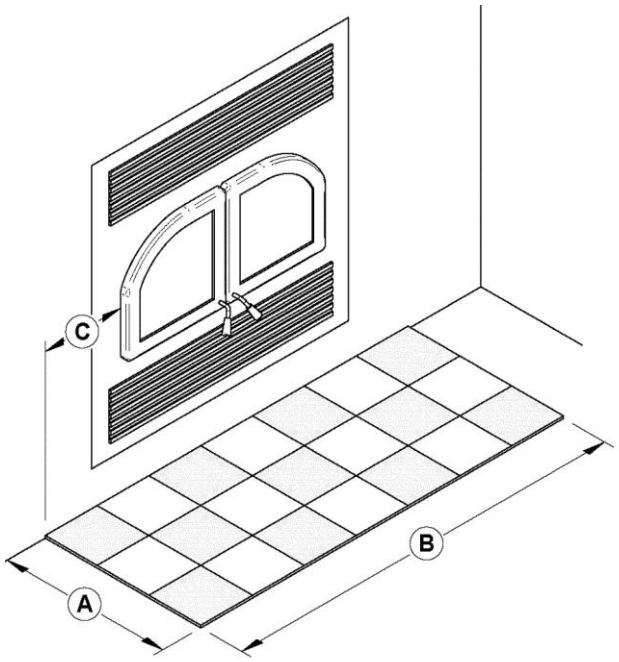

6.2.5 FRAMING, FACING, MANTEL, AND COMBUSTIBLE SHELF

6.2.5.1 Framing

The construction of the framing, facing, and mantel must be in accordance with the standards and the following illustrations:

A. Frame the sides and back of the fireplace using 2" × 3" (5 cm x 8 cm) or heavier lumber. However, the front studs as well as headers on top of the fireplace must be of a depth no more than the depth of the top standoffs.

WARNING: COMBUSTIBLE FRAMING MATERIAL CANNOT BE USED IN THE SPACE DIRECTLY ABOVE THE FIREPLACE, EXCEPT FOR THE STUDS ABOVE THE FACING THAT SUPPORT THE FACING MATERIAL AND MANTEL. THIS AREA MUST REMAIN EMPTY FOR A HEIGHT OF 80" (2.03 M) MEASURED FROM THE BASE OF THE APPLIANCE.

B. Frame the fireplace with vertical studs at the sides of the fireplace running from floor to ceiling. Position the studs back from the front edge of the fireplace, a space the thickness of the facing material so that the facing can be installed flush with the fireplace facing. Frame headers between the vertical studs only as follows:

- Place the front facing headers in 2" × 3" or of a depth no more than the depth of the top standoffs. Do not put wood or any material within the area above the fireplace except what's necessary to support the front facing.

- Place headers only as required to support the facing and mantel.

WARNING: DO NOT PACK REQUIRED AIR SPACES INSIDE THE CHASE WITH INSULATION OR OTHER MATERIALS.

WARNING: THE FIREPLACE MUST NOT BE IN CONTACT WITH ANY INSULATION OR LOOSE FILLING MATERIAL. FOR THIS PURPOSE, COVER THE INSULATION WITH DRYWALL PANELS OR ANY OTHER FINISHING MATERIAL INSIDE THE CHASE AROUND THE FIREPLACE.

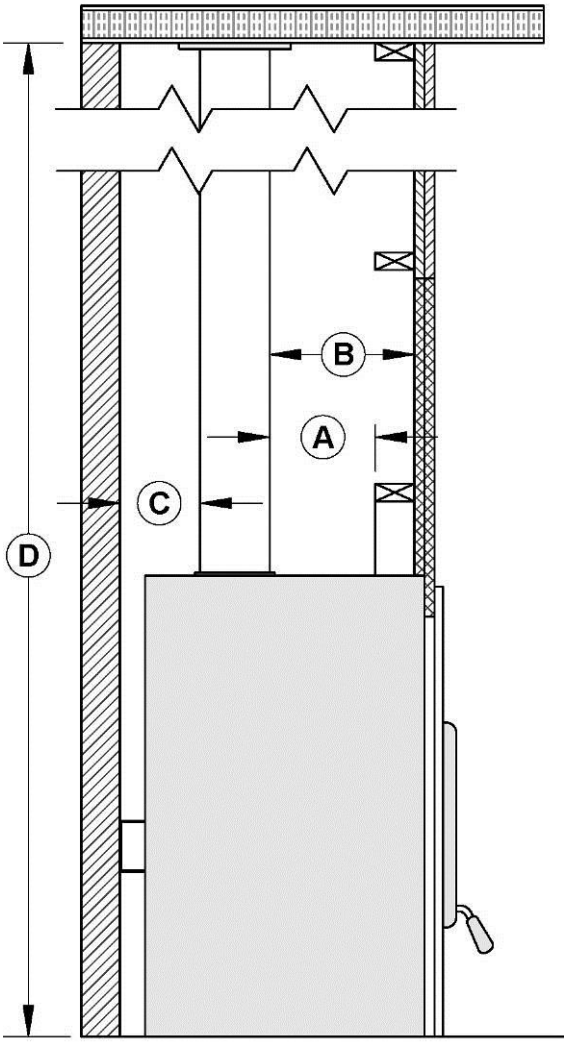

Wall finish behind the fireplace's faceplate installation

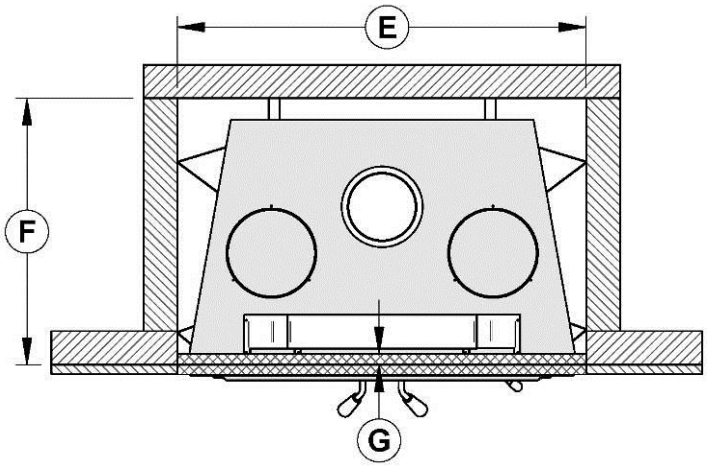

	CLEARANCES
A	4 7/8" (124 mm)
B*	8" (203 mm)
C*	5" (127 mm)
D*	80" (2032 mm)

	MEASUREMENTS
E*	37 7/8" (961 mm)
F*	24 3/4" (630 mm)
G	1 1/2" (39 mm) MAX

*When drywall panels or any other finishing material inside the chase around the fireplace is to be used, add its thickness to the measurement.

See Appendixes for fresh air intake kit (L) and forced air distribution kit (K) installation.

Fresh air intake kit and forced air distribution kit installation

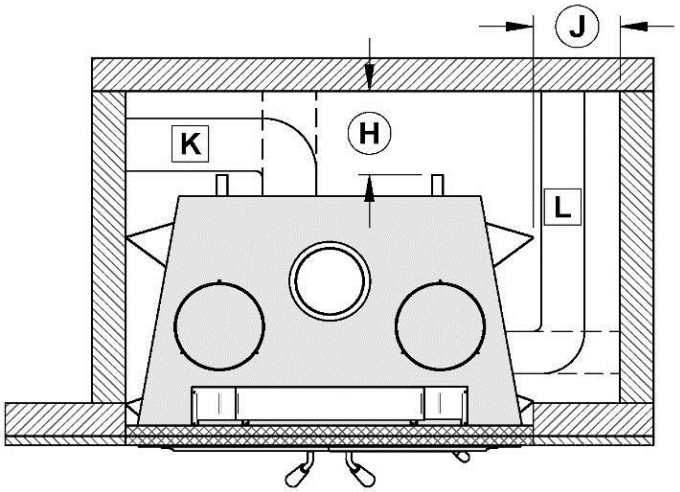

LEGEND	
	Combustible material allowed in this area
	Non-combustible material only in this area

	MINIMUM MEASUREMENTS FOR FRESH AIR INTAKE KIT**	MINIMUM MEASUREMENTS FOR FORCED AIR DISTRIBUTION KIT**
J*	12" (305 mm)	18" (457 mm)
H*	12" (305 mm)	18" (457 mm)

*When drywall panels or any other finishing material inside the chase around the fireplace is to be used, add its thickness to the measurement.

** The fresh air intake kit and the forced air distribution kit may be installed either on the sides or on the back.

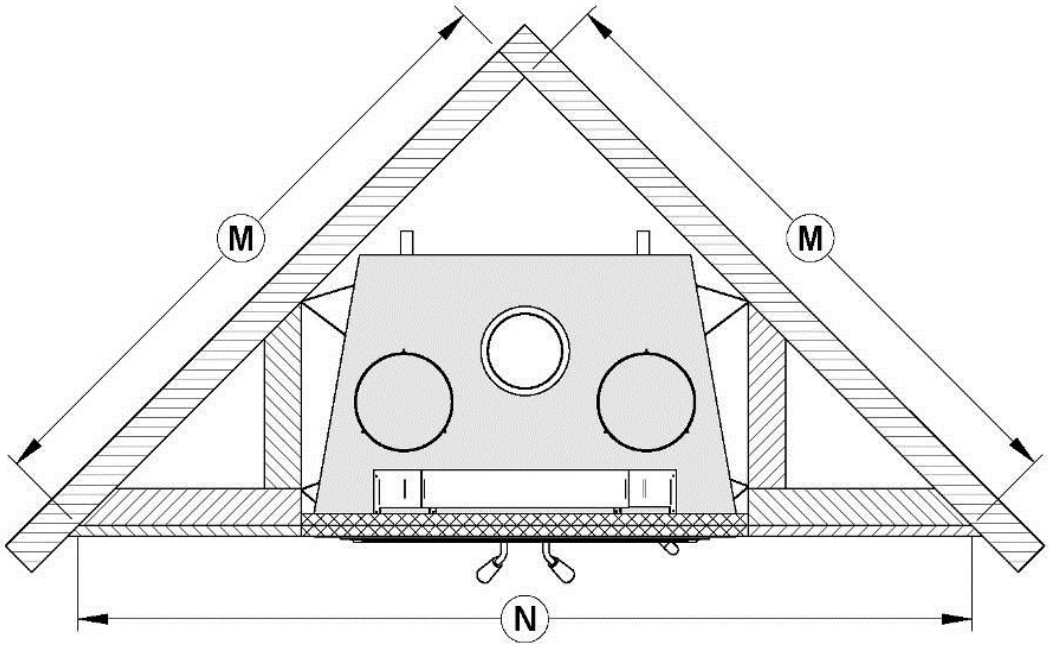

	CLEARANCES**
M*	53 1/2" (1359 mm)
N*	75 1/2" (1918 mm)

*When drywall panels or any other finishing material inside the chase around the fireplace is to be used, add its thickness to the measurement.

**Values M and N are minimum measurements. They may need to be increased to alloy installation of a fresh air intake kit or forced air distribution kit or depending on the finish material used.

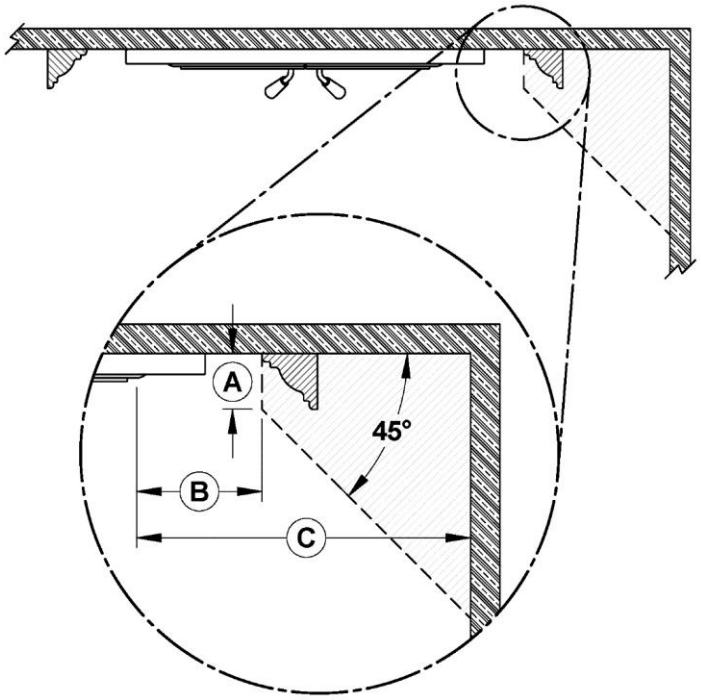

	CLEARANCES
A	3" (76 mm) maximum
B	5 5/8" (143 mm) minimum
C	17" (432 mm) minimum

6.2.5.2 Facing

Non-combustible material such as brick, stone or ceramic tile may be in contact with the fireplace decorative frame. Note that if you ever needed to remove the decorative frame, it might be wise not to seal between the faceplate and finishing material.

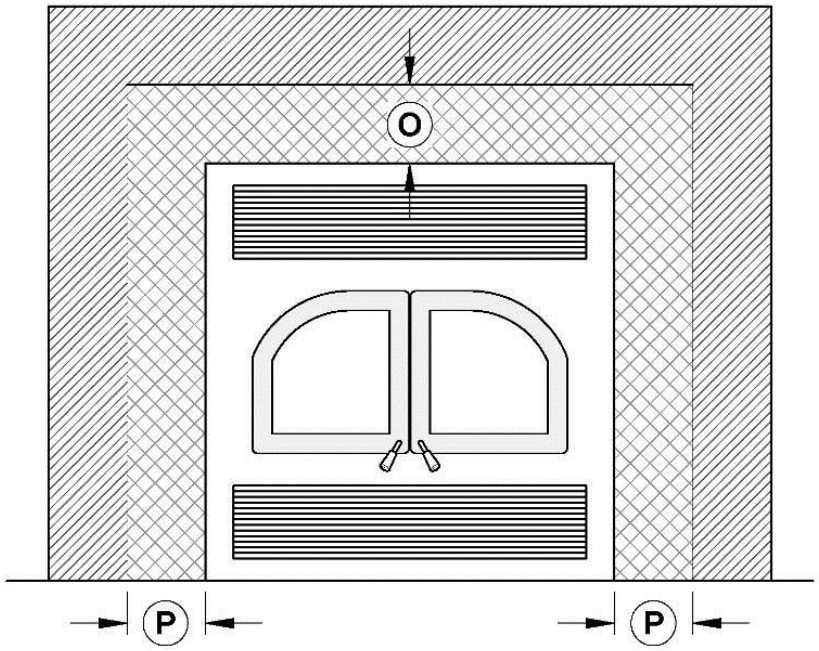

LEGEND	
	Combustible material allowed in this area
	Non-combustible material only in this area

O	24 inches (610 mm)
P	1 ¼ inches (38 mm)

6.2.5.3 Compliance of a Combustible Mantel Shelf

To ensure compliance of an existing mantel shelf or to install a combustible mantel shelf, refer to table and figure below. For example, a mantel shelf with a 6'' depth (152 mm) ((C) value) must be installed at least 58" (1473 mm) ((B) value) above the bottom of the fireplace (see figure below). Different mantel shelf dimensions are listed in the following table. However, no combustible mantel shelf can be installed at less than 58" (1473 mm) above the bottom of the fireplace. If the depth of the mantel shelf is not listed in the table below, add 52" (1321 mm) to the depth of your mantel shelf to obtain the safe positioning of your mantel shelf. For example, for a 9" (229 mm) mantel shelf, the safe positioning would be 61" (1549 mm) above the bottom of the fireplace 52" (1321 mm) + 9" (229 mm)).

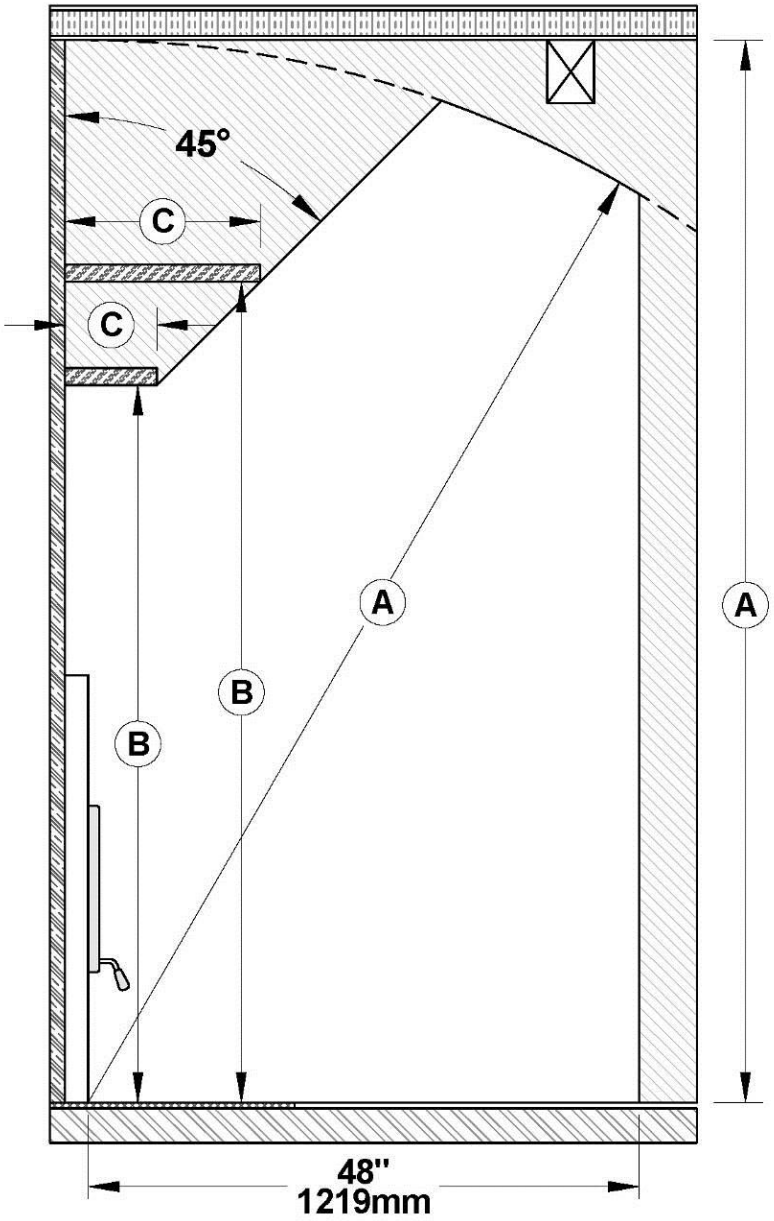

	CLEARANCES
A	80" (2032 mm)

SHELF POSITIONING	
B	**C**
58" (1473 mm)	6" (152 mm)
60" (1524 mm)	8" (203 mm)
62" (1575 mm)	10" (254 mm)
64" (1626 mm)	12" (305 mm)

7 CLEARANCES TO COMBUSTIBLE MATERIAL

The clearances shown in this section have been determined by test according to procedures set out in safety standards ULC S610 (Canada) and UL127 (U.S.A.). When the fireplace is installed so that its surfaces are at or beyond the minimum clearances specified, combustible surfaces will not overheat under normal and even abnormal operating conditions.

No part of the fireplace may be located closer to combustibles than the minimum clearances given below.

The following clearances meet the minimum requirements for a safe installation.

Side wall: 17" (43 cm) measured from the inside door frame.

Side mantle: 3" minimum

Wall in front of fireplace: 48"

Ceiling: 80 in. (2.03 m) measured from the base of the fireplace.

Fireplace enclosure:

Back wall: 0"

Sides: 0"

Floor (under the fireplace): 0"

Chimney: 2" (50 mm)

Combustible shelf:

58" (147 cm) measured from the base of the fireplace for a shelf with a depth of 6" (15 cm) or less.

64" (163 cm) measured from the base of the fireplace for a shelf with a depth of more than 12" (30 cm).

7.1 LOCATING THE CERTIFICATION LABEL

Since the information given on the certification label attached to the appliance always overrides the information published in any other media (owner's manual, catalogues, flyers, magazines and/or web sites), it is important to refer to it in order to have a safe and compliant installation. In addition, you will find information about your fireplace (model, serial number, etc.). You can find the certification label beneath the fireplace, behind the bottom louver.

8 THE VENTING SYSTEM

8.1 GENERAL

The venting system, acts as the engine that drives your wood heating system. Even the best fireplace will not function safely and efficiently as intended if it is not connected to a suitable chimney.

The heat in the flue gases that pass from the fireplace into the chimney is not waste heat. This heat is what the chimney uses to make the draft that draws in combustion air, keeps smoke inside the fireplace and safely vents exhaust to outside. You can think of heat in the flue gas as the fuel the chimney uses to make draft.

8.2 SUITABLE CHIMNEYS

Your wood fireplace will provide optimum efficiency and performance when connected to a 6-inch diameter chimney.

8.3 MINIMUM CHIMNEY HEIGHT

The top of the chimney should be tall enough to be above the air turbulence caused when wind blows against the house and its roof. The chimney must extend at least 1 m (3 ft.) above the highest point of contact with the roof, and at least 60 cm (2 ft.) higher than any roof line or obstacle within a horizontal distance of 3 m (10 ft.).

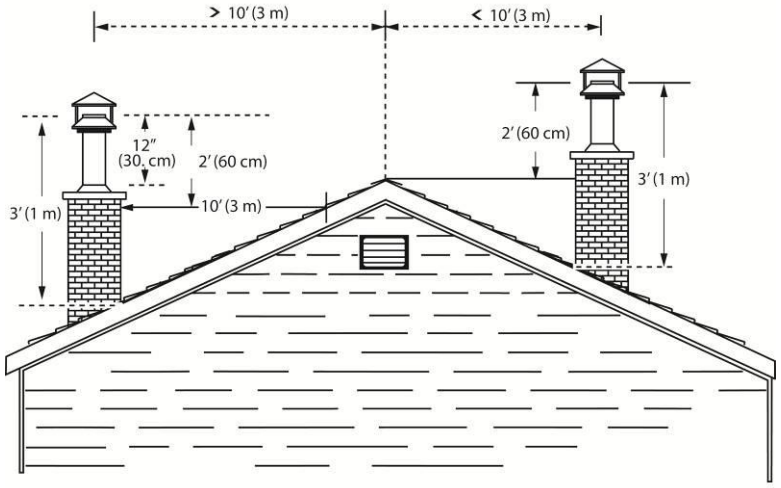

8.4 THE RELATIONSHIP BETWEEN THE CHIMNEY AND THE HOUSE

Because the venting system is the engine that drives the wood heating system, it must have the right characteristics. The signs of bad system design are cold backdrafting when there is no fire in the fireplace, slow kindling of new fires, and smoke roll-out when the door is opened for loading.

8.4.1 WHY THE CHIMNEY SHOULD PENETRATE THE HIGHEST HEATED SPACE

When it is cold outside, the warm air in the house is buoyant so it tends to rise. This tendency of warm air to rise creates a slight pressure difference in the house. Called 'stack effect', it produces a slightly negative pressure low in the house (relative to outside) and a slightly positive pressure zone high in the house. If there is no fire burning in a heater connected to a chimney that is shorter than the warm space inside the house, the slight negative pressure low in the house will compete against the desired upward flow in the chimney.

There are two reasons why the chimney in the house at right will cold backdraft when it is cold outside and there is no fire burning in the fireplace. First, the chimney runs up the outside of the house, so the air in it is colder and denser than the warm air in the house. And second, the chimney is shorter than the heated space of the house, meaning the negative pressure low in the house will pull outside air down the chimney, through the fireplace and into the room. Even the finest fireplace will not work well when connected to this chimney.

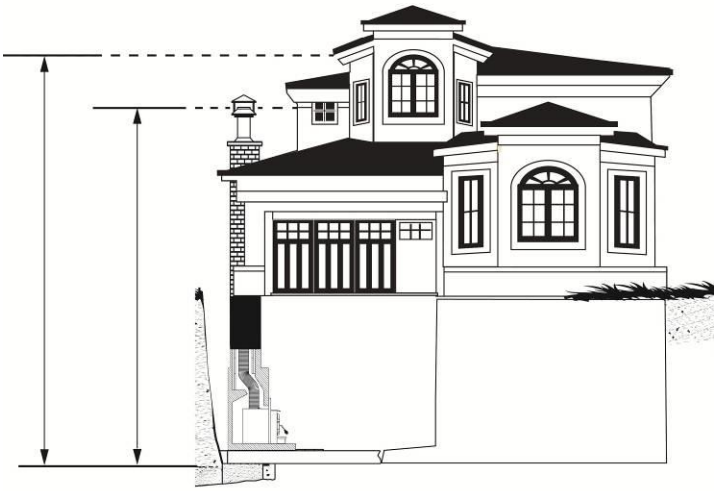

8.5 CHIMNEY INSTALLATION NOTES

1. If possible, install an interior chimney as it will provide better performance. In areas with continuous temperatures below −18° C (0° F), the use of an exterior chimney increases the likelihood of operating problems such as low draft, high rate of creosoting, and poor start-up characteristics. Exterior chimneys are also prone to down-drafting and flow reversal. Installations, which are located on lower floors in the house, such as in a basement, in combination with outside chimney, are especially prone to flow reversal.

2. The Stratford is listed only with chimney systems described in **TABLE 2 - LISTED CHIMNEYS FOR YOUR STRATFORD**.

3. A chimney venting a fireplace shall not vent any other appliance.

4. The minimum chimney system height for a straight installation is 15 ft. (4,6 m).

5. All chimney installations must include at least one support. Reducing the amount of chimney weight on the fireplace will help avoid the noise created when the fireplace expands. This can be achieved by having the chimney supported by the supports. The maximum chimney length that should be supported by the fireplace is 9 ft. (2.75 m) for 2" Solid Pack Chimney and 12 ft. (3.7 m) for 1" Solid Pack Chimney.

6. The chimney must extend at least 3 ft. (92 cm) above its point of contact with the roof and at least 2 ft. (61 cm) higher than any wall, roof or building within 10 ft. (3.1 m) of it. See the figures on point 11 bellow to determine the configuration that applies to your roof (flat or sloped roof and the distance between the chimney and the highest point of the roof and/or the nearest chimney).

7. Deviations should be avoided whenever possible, especially the most pronounced. Each deviation adds some restriction to the chimney system and may lead to draft problems.

8. If the chimney extends higher than 5 ft. (1.5 m) above its point of contact with the roof, it must be secured using a roof brace.

9. A rain cap must be installed on top of the chimney. Failure to install a rain cap may cause corrosion problems.

10. Cut and frame square holes in all floors, ceilings, and roof that the chimney will go through to provide a 2" (50 mm) minimum clearance between the chimney and any combustible materials. Do not fill this 2″ space with insulation or any other combustible material.

11. Portions of the chimney which may extend through accessible spaces must be enclosed to avoid contact with combustible materials or damage the chimney.

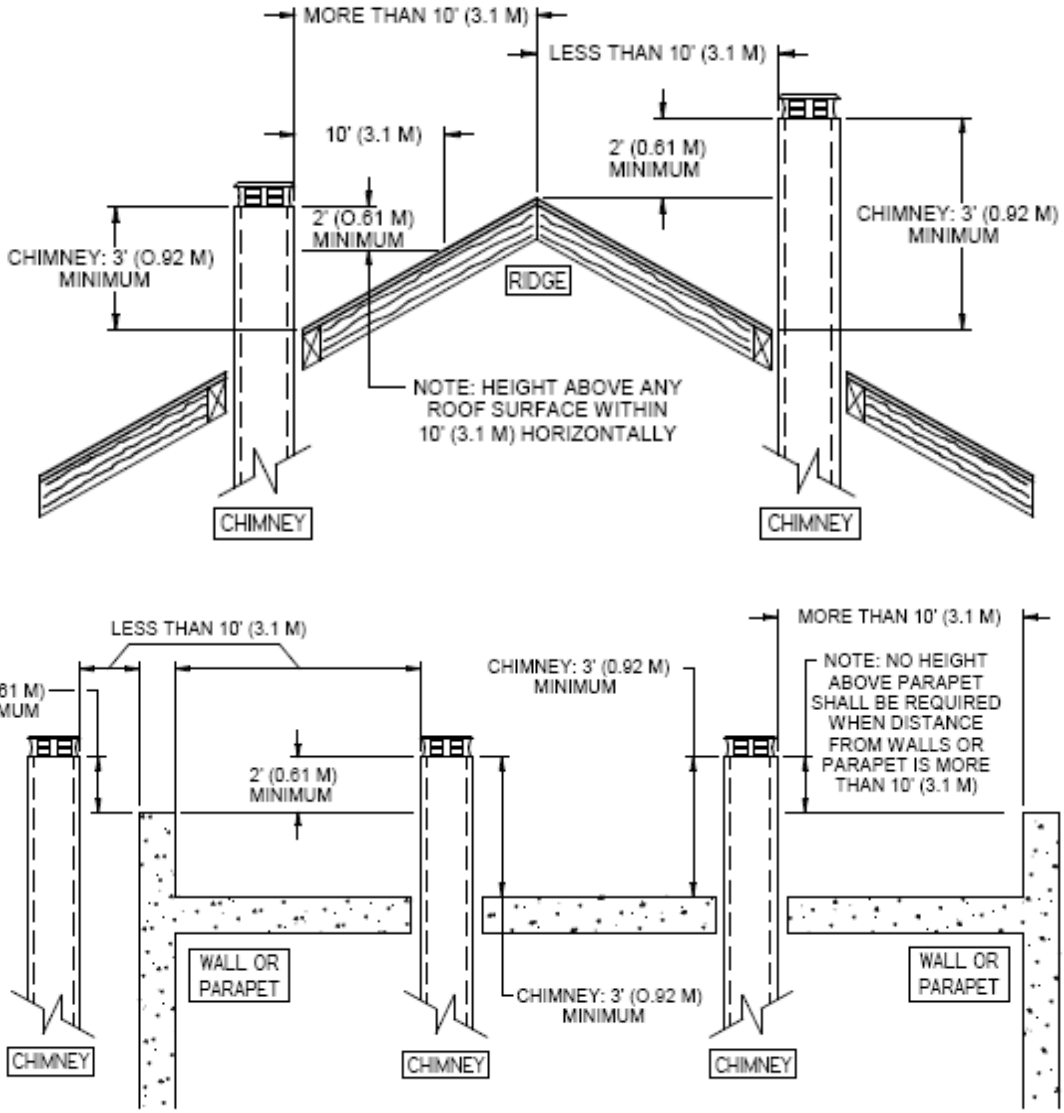

12. For installations where more than one chimney is located in the same non-chase or within the same area, we suggest that their terminations be separated by at least 16" (410 mm) horizontally, and 18" (460 mm) vertically. This separation is to prevent smoke migrating from one chimney to another.

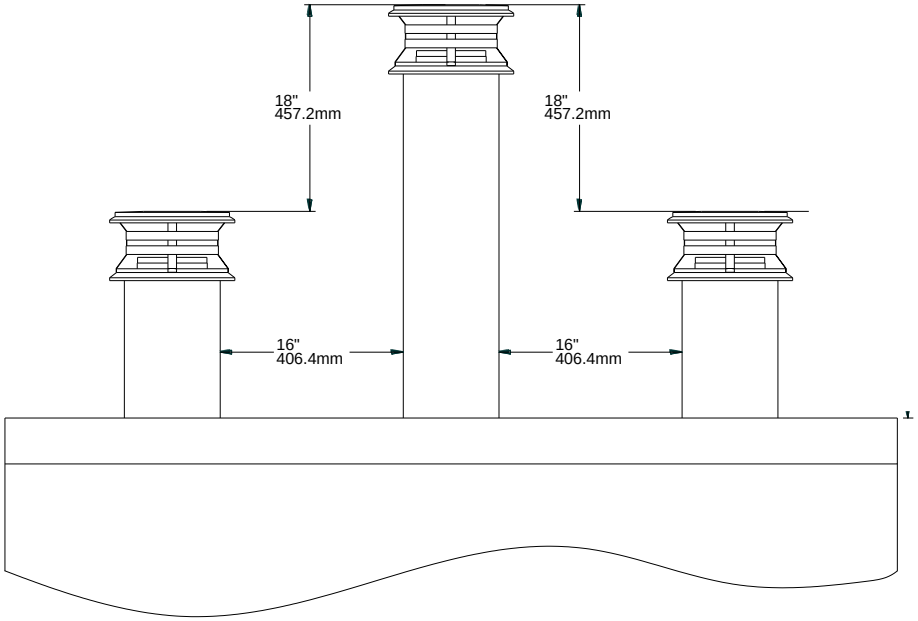
18"
457.2mm
18"
457.2mm
16"
406.4mm
16"
406.4mm

8.6 CHIMNEY INSTALLATION INSTRUCTIONS

Always refer to the chimney manufacturer's Installation manual to ensure a safe installation. Some non-illustrated parts may be required.

8.6.1 EXAMPLES OF TYPICAL CHIMNEY INSTALLATION

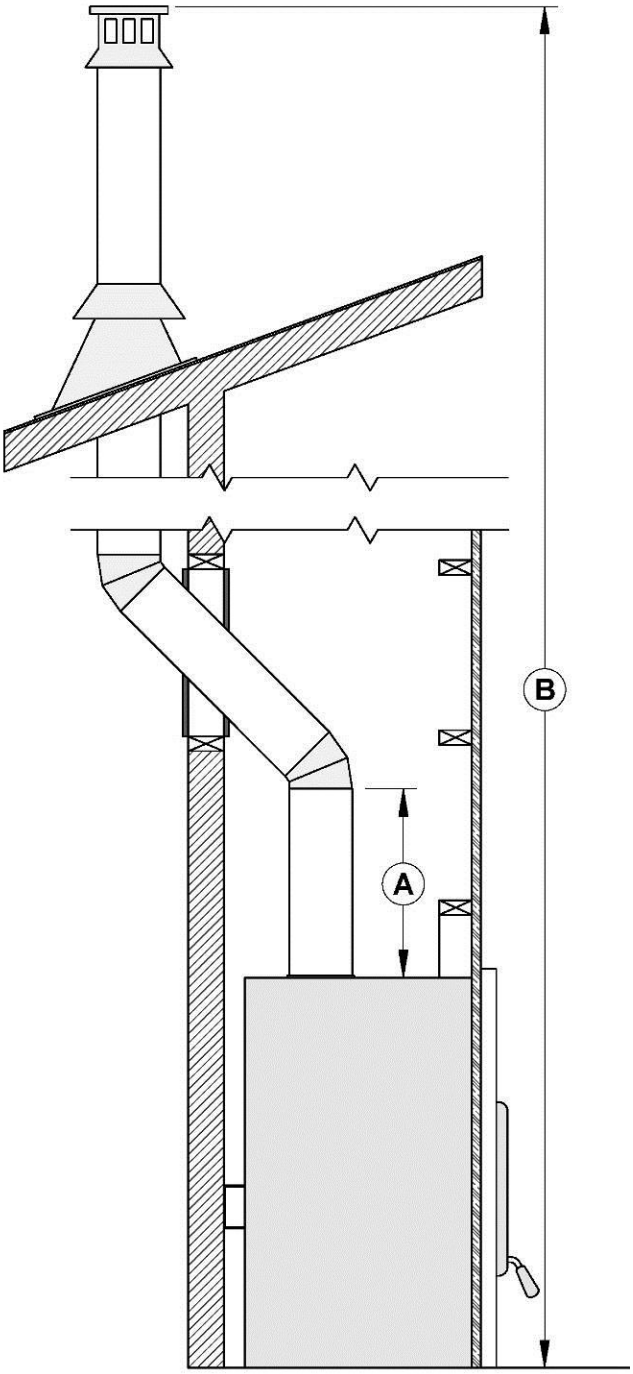

A	To insure a good draft, it is recommended to have a length of 18 inches from the top of the unit to the first offset. However, starting using a 30° or 45° elbow is also approved.
B	Mandatory measure of 15 ft. from the bottom of the fireplace to the top of the outside chimney.

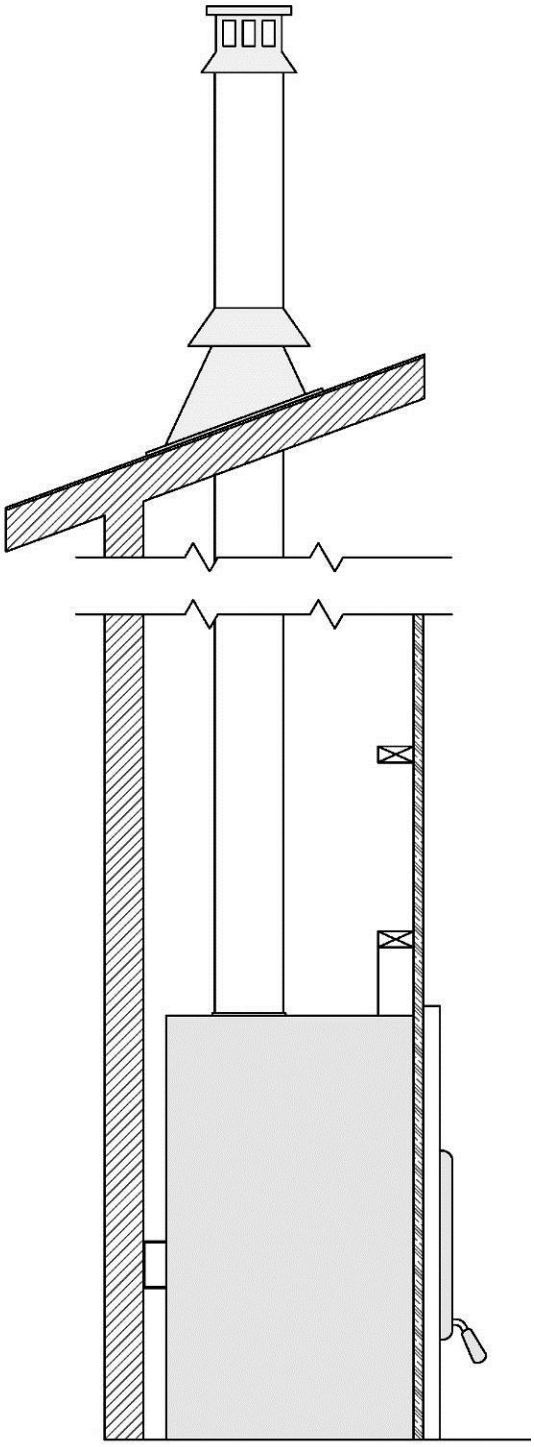

Direct installation

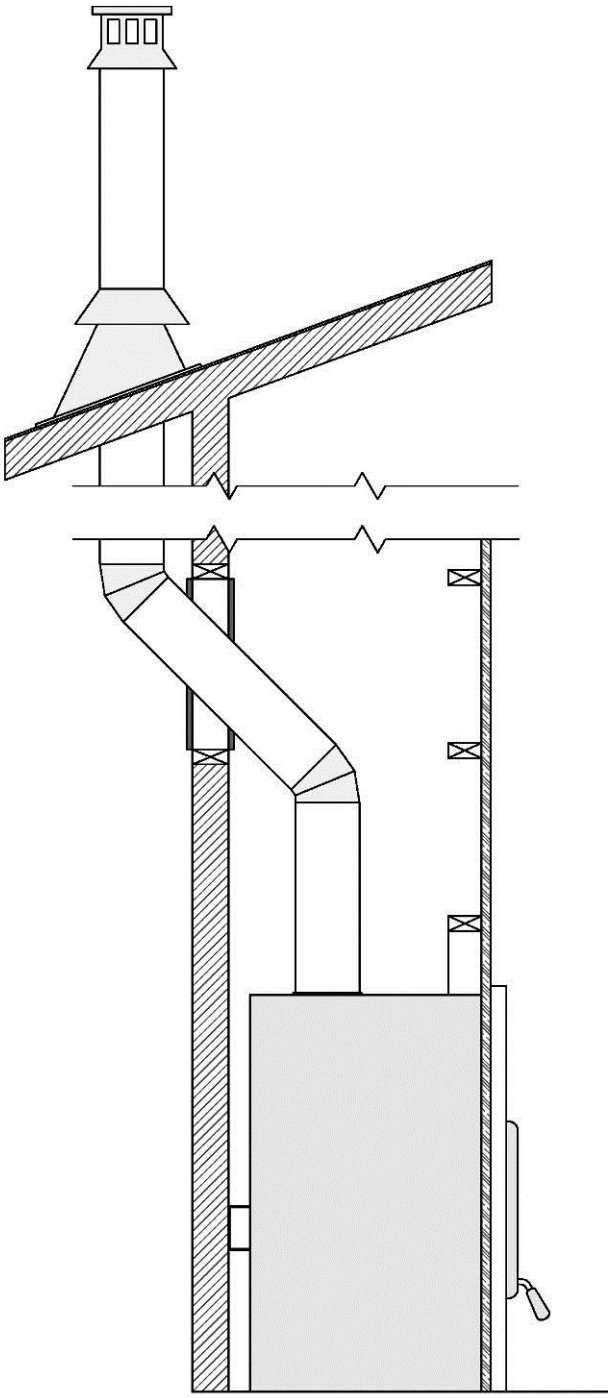

Exterior offset installation

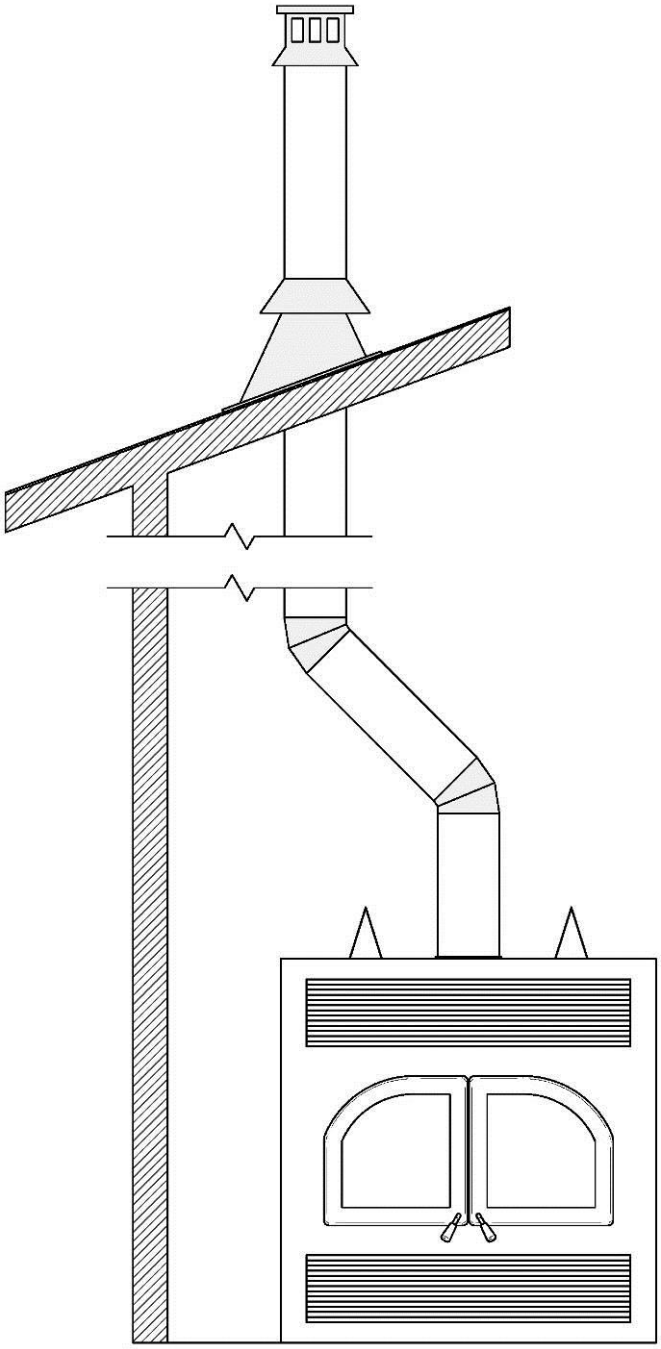

Interior offset installation

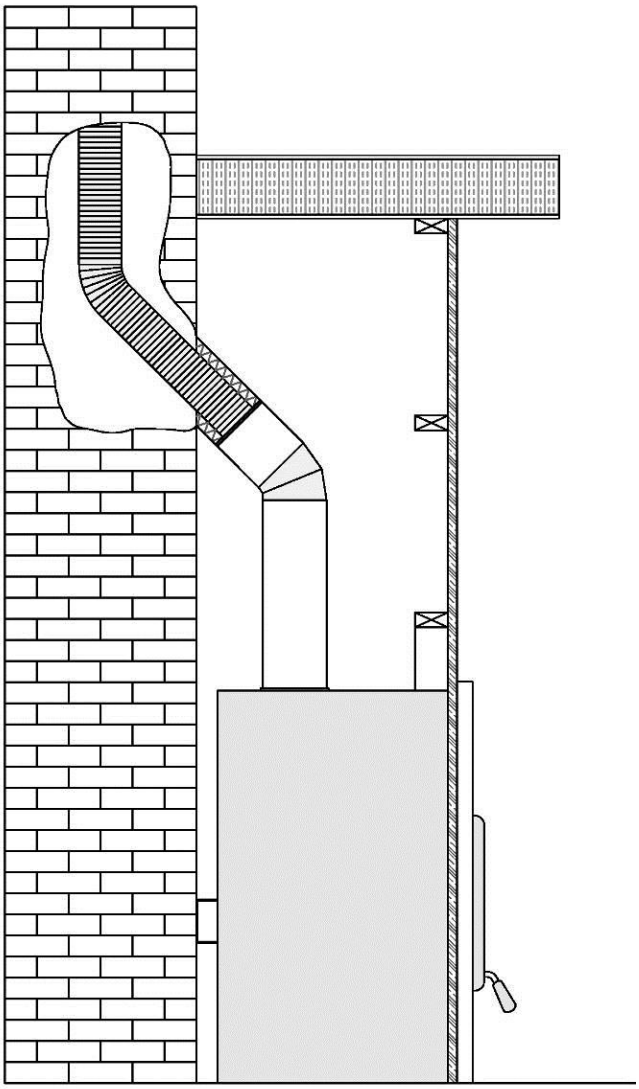

Connection to a masonry chimney

1. Cut and frame the holes in the ceiling, floor and roof where the chimney will pass. Use a plumb bob to line up the center of the holes. Make sure that the size of the floor and ceiling holes are in accordance with the chimney manufacturer's instructions.

2. From below, install a firestop (A) supplied by the chimney manufacturer in each ceiling/floor separation through which the chimney will pass. At the attic level, install a radiation shield from above (C).

3. Follow the chimney's manufacturers' instructions and place the first chimney length on the fireplace. For all chimneys, you must use an anchor plate (A) supplied by the chimney manufacturer before installing the first chimney length. Continue installing chimney lengths making sure to lock each length in place.

4. Every time the chimney passes through a ceiling or a wall, install the appropriate firestop. When you reach the desired height, install the roof support (not illustrated). (Refer to instructions included with the support).

5. Then, put the roof flashing (D) in place and seal the joint between the roof and the flashing with roofing pitch. For sloping roofs, place the flashing under the upper shingles and on top of the lower shingles. Nail the flashing to the roof, using roofing nails.

6. Place the storm collar (E) over the flashing, and tighten it with the bolt supplied. Finally, seal the joint between the storm collar and the chimney, using silicone caulking.

7. Install the chimney cap (G).

8. When a ventilated roof flashing is installed, precautions are to be taken not to caulk or seal the ventilating openings.

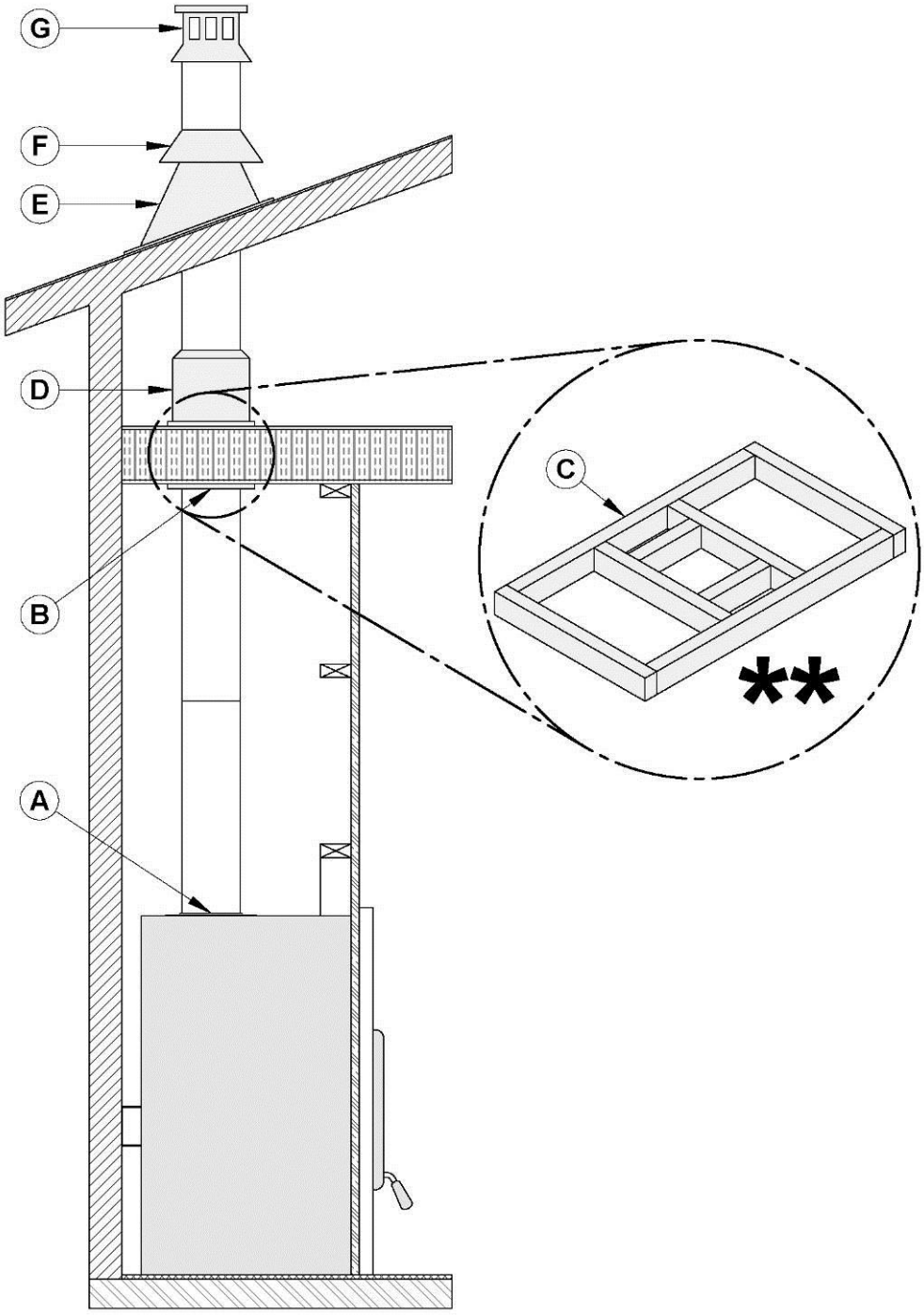

** **THE STRUCTURAL INTEGRITY OF THE FLOOR, WALL, AND CEILING/ROOF MUST BE MAINTAINED.**

NOTE: THE FLOOR AND WALLS BELOW THE ATTIC MUST BE INSULATED USING THE SAME INSULATION.

8.6.2 OFFSET CHIMNEY INSTALLATION

Table 1 - The minimum system height when using elbows is:

Fireplace model	STRATFORD
Chimney model	All models (see Table 2)
Vertical installation	15 ft. (4.6 m)
Two (2) elbows	15 ft. (4.6 m)
Four (4) elbows	17 ft. (5.2 m)

After reaching the location requiring the elbow, proceed as follows:

1. Install the first elbow; turn it in the required direction. Secure it to the chimney according to the chimney manufacturer's instructions. In many cases, it is recommended to secure connections with three (3) ½" (12 mm) metal screws.

2. Install the necessary chimney lengths to achieve the required offset. Lock the chimney lengths together according to the chimney manufacturer's instructions. In many cases, it is recommended to use three (3) ½" (12 mm) screws. If the offset length is made of two (2) chimney lengths or more, many chimney manufacturers may require that you use an offset or roof support halfway up the offset. If penetrating a wall, install a wall radiation shield supplied by the chimney manufacturer.

3. Use another elbow to turn the chimney vertically. Secure the elbow.

4. Use a plumb bob to line up the centre of the hole. Cut a hole for the chimney in the ceiling/floor. Frame this hole as described previously.

5. From below, install a firestop supplied by the chimney manufacturer (see preceding figure).

6. A support must be used on the first 15' section (4.6 m).

7. Continue with the regular installation.

TABLE 2 - LISTED CHIMNEYS FOR YOUR STRATFORD

CHIMNEY MANUFACTURER	BRAND	TYPE	INNER DIAMETER
Olympia Chimney	Ventis	1" Solid Pack	6" (15 cm)
SBI Venting division	Nexvent	1" Solid Pack	6" (15 cm)
Selkirk	Ultra-Temp (UT)	1" Solid Pack	6" (15 cm)
Selkirk	Super Pro (SPR)	1" Solid Pack	6" (15 cm)
Selkirk	Super Vent (JSC)	1" Solid Pack	6" (15 cm)
Selkirk	Hart & Cooley (TLC)	1" Solid Pack	6" (15 cm)
Selkirk	Sure-Temp (ST)	1" Solid Pack	6" (15 cm)
Selkirk	CF Sentinel (CF)	2" Solid Pack	6" (15 cm)
Selkirk	Super Pro 2100 (ALT)	2" Solid Pack	6" (15 cm)
Selkirk	Super Vent 2100 (JM)	2" Solid Pack	6" (15 cm)
Selkirk	UltimateOne	1" Solid Pack	6" (15 cm)
Security Chimney	ASHT+	1" Solid Pack	6" (15 cm)
Security Chimney	S-2100 +	2" Solid Pack	6" (15 cm)
M&G DuraVent	Dura Tech	1" Solid Pack	6" (15 cm)
M&G DuraVent	Dura Tech Canada DTC	1" Solid Pack	6" (15 cm)
M&G DuraVent	Dura Plus HTC	2" Solid Pack	6" (15 cm)
M&G DuraVent	Dura Plus	AC Triple Wall	6" (15 cm)
ICC	Excel 2100	1" Solid Pack	6" (15 cm)
Metal Fab	Temp Guard	1" Solid Pack	6" (15 cm)
American Metal	HSS	AC Triple Wall	6" (15 cm)
American Metal	HS	AC Triple Wall	6" (15 cm)
Rockford Chimney	Rock-Vent	1" Solid Pack	6" (15 cm)

<u>WARNING</u>: IN EVERY CASE, THE CHIMNEY MUST START WITH A 6'' DIAMETER ANCHOR PLATE SECURED TO THE FIREPLACE.

TABLE 3 – LIST OF MANDATORY COMPONENTS

CHIMNEY MANUFACTURER	MANDATORY COMPONENTS	TYPE/BRAND
Selkirk	• Ventilated roof flashing. • Must have rafter protectors at the roof level if the chimney is enclosed at the attic level.	Ultra-Temp (UT), Super Pro (SPR), Super vent (JSC), Hart & Cooley (TLC), Sure-Temp (ST)
Security Chimney	• Rafter protector at the roof level if chimney is enclosed at the attic level. • Requires insulated attic radiation shield unless chimney is enclosed at the attic level.	1" Solid Pack: ASHT+, 2" Solid Pack: S-2100
M&G DuraVent	• Ventilated roof flashing. • Rafter protector at the roof level is chimney is enclosed at the attic level.	1" Solid Pack: Dura Tech
ICC	• Ventilated roof flashing. • Rafter protector at the roof level if chimney is enclosed at the attic level.	Excel 2100
American Metal	• Chimney cannot be enclosed at the attic level.	AC Triple wall HS, AC Triple wall HSS

*You can get a kit of four (4) rafter protector (AC03510) from your dealer. Each rafter is made of 22GA galvanized steel (10.44” W x 5.126”H).

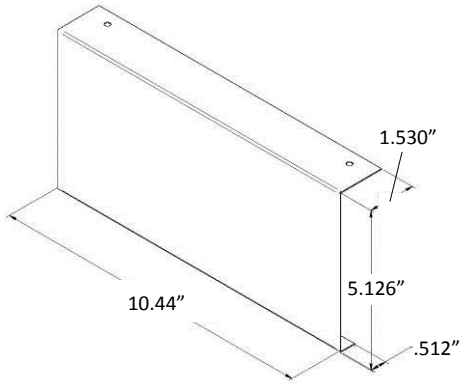

8.7 ANGLED WALL RADIATION SHIELD

When passing through a combustible wall with the chimney at a 30° or 45° angle (30° or 45° in Canada and 30° only in the USA), an angled firestop or wall radiation shield provided by the chimney manufacturer must be installed. Only one is required. Follow the chimney manufacturer's installation instructions.

In cold climate locations, it is recommended that you use the insulated wall radiation shield since it will maintain the home's thermal barrier.

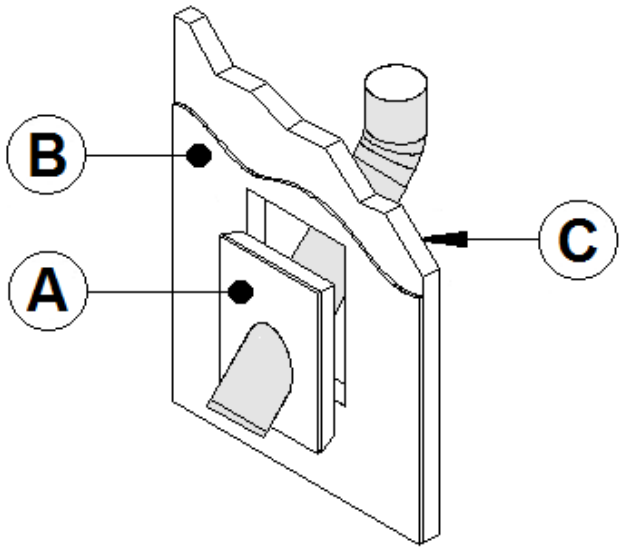

A	INSULATED WALL RADIATION SHIELD
B	GYPSUM BOARD
C	INSULATED WALL

8.8 CHIMNEY SUPPORT INSTALLATION

8.8.1 UNIVERSAL ROOF SUPPORT

This support has three possible uses:

1. It must be used on a roof to support the chimney.
2. It may be used on a floor, ceiling or roof above an offset to support the chimney above the offset.
3. It may be used on a floor, ceiling or roof as a supplementary support.

For roof support installation, refer to the instructions provided with the support by the chimney manufacturer. Many manufacturers will provide the maximum height of chimney that can be supported by the support. Make sure you respect those parameters.

8.8.2 UNIVERSAL OFFSET SUPPORT

This support is used to support the chimney above an offset. When the chimney offset is used to pass through a wall, this support may be used on the wall to support the chimney. For offset support installation, refer to the instructions provided with the support by the chimney manufacturer. Many manufacturers will provide the maximum height of chimney that can be supported by the support. Make sure you respect those parameters.

8.9 INSTALLATION INSTRUCTIONS FOR MASONRY APPLICATION

WARNING: BEFORE STARTING THE INSTALLATION, THE MASONRY CHIMNEY MUST BE INSPECTED BY A QUALIFIED SWEEP.

The following requirements must be respected:

1. The chimney must be absolutely clear of any soot residue or creosote. Check for cracks, loose or missing bricks that could inhibit correct installation of the liner.
2. The clearance to combustible must be a minimum of 1" between the outside of the masonry and any wood framing or loose insulation.
3. The chimney must be built in accordance with the current building code.
4. No other appliance can be connected to the same chimney.

Installation:

The chimney must be relined with a stainless steel liner of the same diameter as the outlet of the fireplace. For connection at 30˚ or 45° angle, a special connector (B) must be used to connect the liner (C) to the insulated chimney (A). Verify availability and installation instructions for this connector with the chimney manufacturer.

Follow these steps:

1. Position the fireplace in its location. Temporarily install the elbow or chimney section (A) on the top of the fireplace and, using a level, mark with an oval the location where the flue liner will enter the masonry chimney.
2. In the middle of the oval, drill a hole in the masonry chimney at 45° or 30°.
3. Increase the size of the hole until a 45° or 30° insulated liner adapter (B) can be easily slipped through.
4. Slide the liner (C) down from the top of the masonry chimney until you reach the hole level.
5. Slip through the hole a 45° or 30° insulated liner adapter and connect it to the liner.
6. Seal the opening around the liner with high temperature refractory cement.
7. Then, follow the chimney manufacturer's instructions to connect the extended liner section to the special chimney connector.

Note: Make sure the liner exceeds at least 12" (30 cm) the top of masonry chimney.

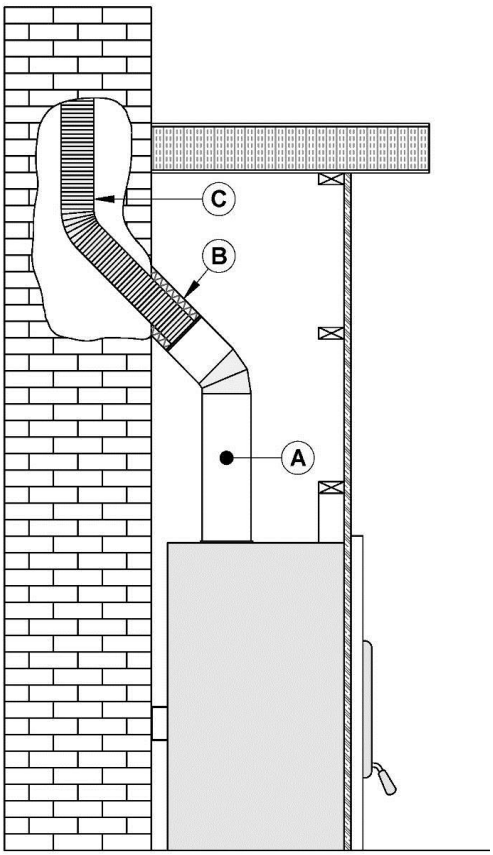

8.10 SUPPLY OF COMBUSTION AIR

In Canada, wood fireplaces are not required to have a supply of combustion air from outdoors because research has shown that these supplies do not give protection against house depressurization and may fail to supply combustion air during windy weather. However, to protect against the risk of smoke spillage due to house depressurization, **a carbon monoxide (CO) detector/alarm is required** in the room where the fireplace is installed. The CO detector will provide warning if for any reason the wood fireplace fails to function correctly.

8.10.1 AIR SUPPLY IN CONVENTIONAL HOUSES

The safest and most reliable supply of combustion air for your wood fireplace is from the room in which it is installed. Room air is already preheated so it will not chill the fire, and its availability is not affected by wind pressures on the house. Contrary to commonly expressed concerns, almost all tightly-sealed new houses have enough natural leakage to provide the small amount of air needed by the fireplace. The only case in which the wood fireplace may not have adequate access to combustion air is if the operation of a powerful exhaust device (such as a kitchen range exhaust) causes the pressure in the house to become negative relative to outdoors.

If you do install an air supply through the wall of the house, be aware that its pressure can be affected during windy weather. If you notice changes in wood fireplace performance in windy weather, and in particular if smoke puffs from the fireplace, you should disconnect the outdoor air duct from the fireplace and remove the duct. In some windy conditions, negative pressure at the duct weatherhood outside the house wall may draw hot exhaust gases from the fireplace backwards through the duct to outdoors. Check the outdoor air duct for soot deposits when the full system is cleaned and inspected at least once each year.

APPENDIX 1: HEAT DISTRIBUTION KIT INSTALLATION

Different heat distribution systems can be installed with the Stratford:

- Hot air gravity distribution kit - Traditional style (AC01375)
- Hot air gravity distribution kit - Modern with adjustable pipes (AC01389)
- Forced air distribution kit (AC01340)

Hot air gravity distribution kit - Traditional style (AC01375)

The kit includes:

- 2x hot air outlets (grilles (A) and frames (B));
- 2x 90° elbows (C);
- 6x steel brackets (D) with fastening screws (E) and self-tapping screws (F)

Parts not included in the kit:

- 2x 8" rigid ducting (G)

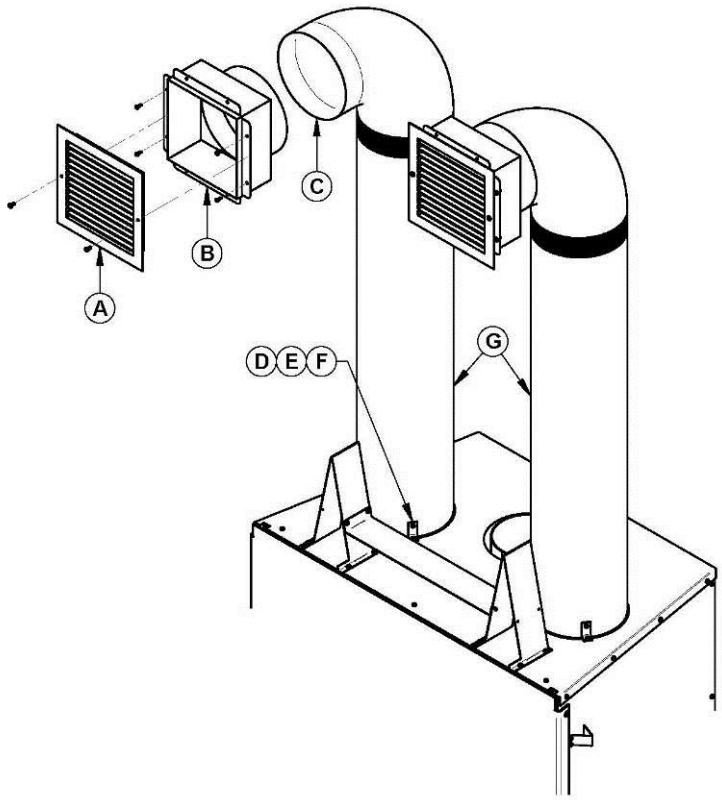

DIMENSIONS OF HOT AIR OUTLET FRAME WITH ELBOW

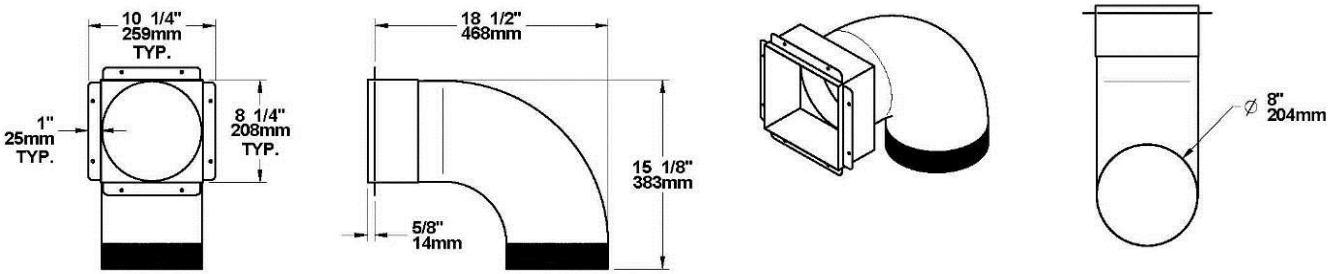

DIMENSIONS OF HOT AIR OUTLET DECORATIVE GRILLE WITH ELBOW

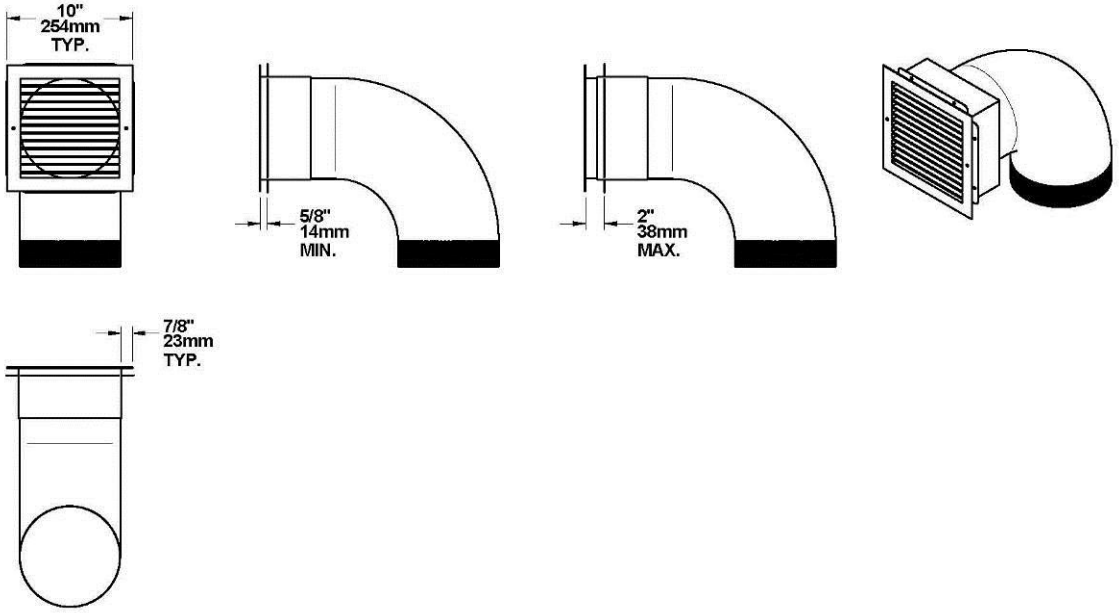

The safety rules and installation procedures for both hot air gravity distribution kits (AC01375, AC01389) are the following:

Minimum height*:	68" (1.7 m)
Minimum distance from ceiling:	12" (30 cm)
Maximum length:	10' (3m)

*The minimum height of the hot air ducting must be measured from the floor to the top of the hot air grilles.

The hot air grilles can be installed in the same room as the fireplace, or one or both of the grilles can be installed in adjacent or upper rooms. Installing the ducts at different elevations will tend to exhaust more heat out of the higher grilles.

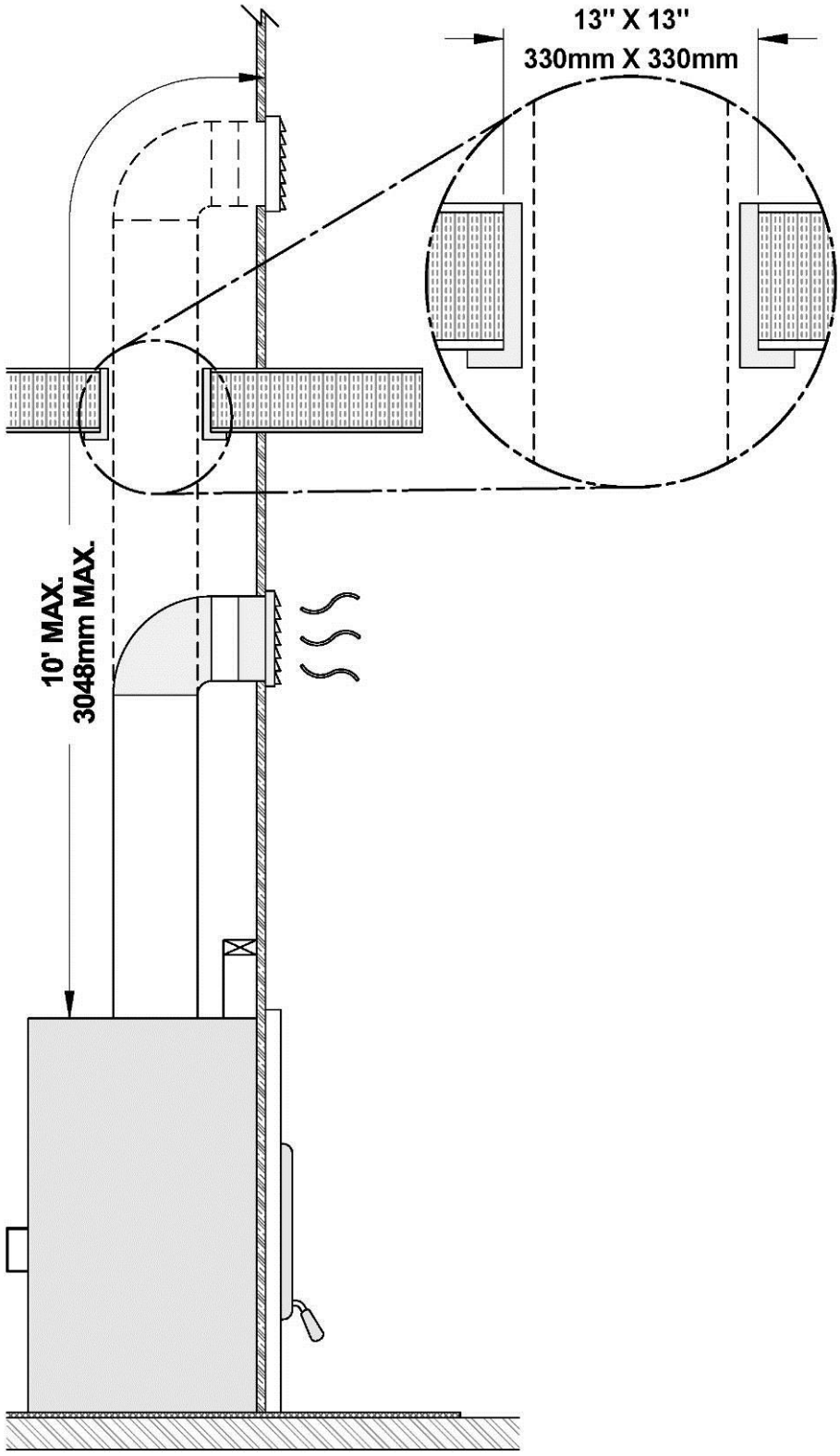
13" X 13"
330mm X 330mm
10' MAX.
3048mm MAX.

The duct system must be installed respecting the following:

1. It is recommended to wear gloves to perform this procedure. Remove the plates closing up the 8" dia. holes on top of the fireplace. Then, cut and remove the insulation in order to obtain two 8" dia. openings. Then, remove the plates closing up the 8" dia. holes inside the fireplace.

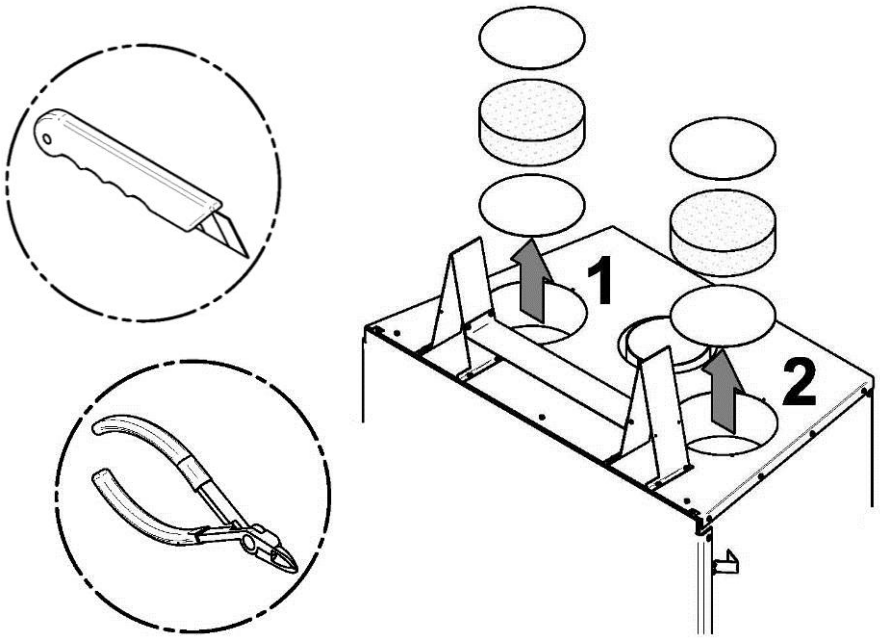

2. Secure the 6 steel brackets (B) with 6 screws provided (C) on top of the fireplace (3 for each ducting). Insert the ducting (A) (not provided) into each opening and secure it in place using the steel brackets (B) installed previously with 6 other self-tapping screws provided (C).

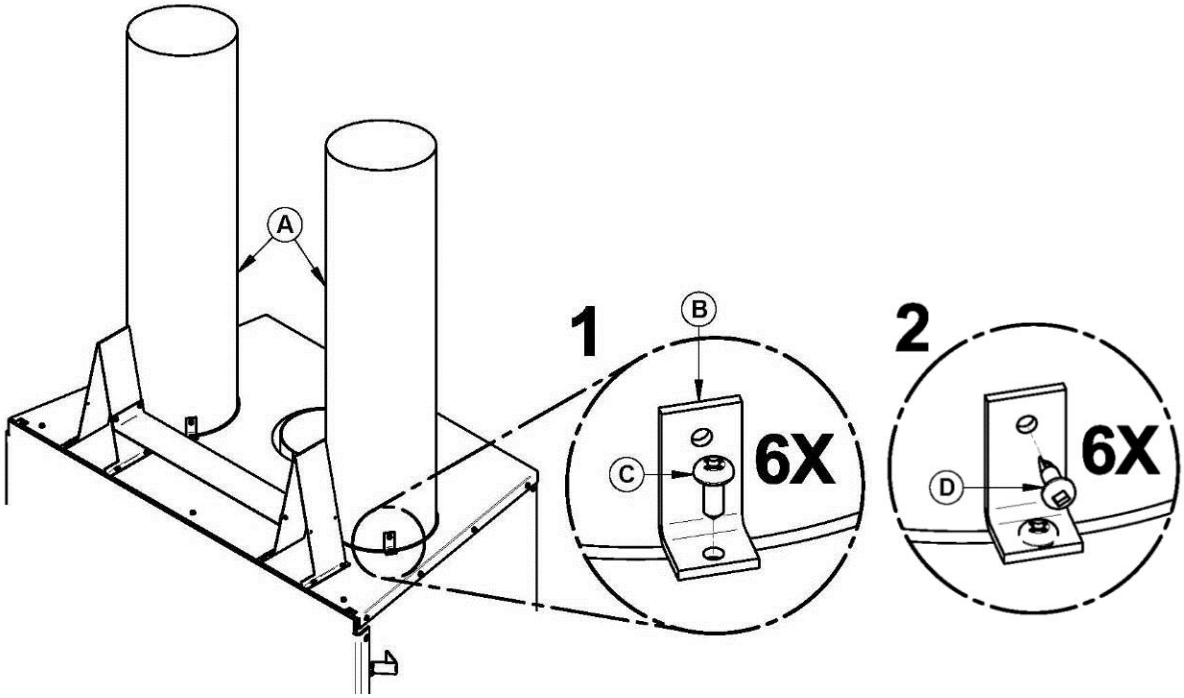

3. Secure the ducting (A) to the 90° elbows (E) with self-tapping screws (3 per elbow). Insert the hot air outlets (F) in the elbow (E). Set hot air outlets frames behind the non-combustible materiel and secure

to the wall with screws. Secure hot air outlets (F) to the elbows (E) with 3 self-tapping screws each. Secure the hot air outlets grilles to the frames with screws.

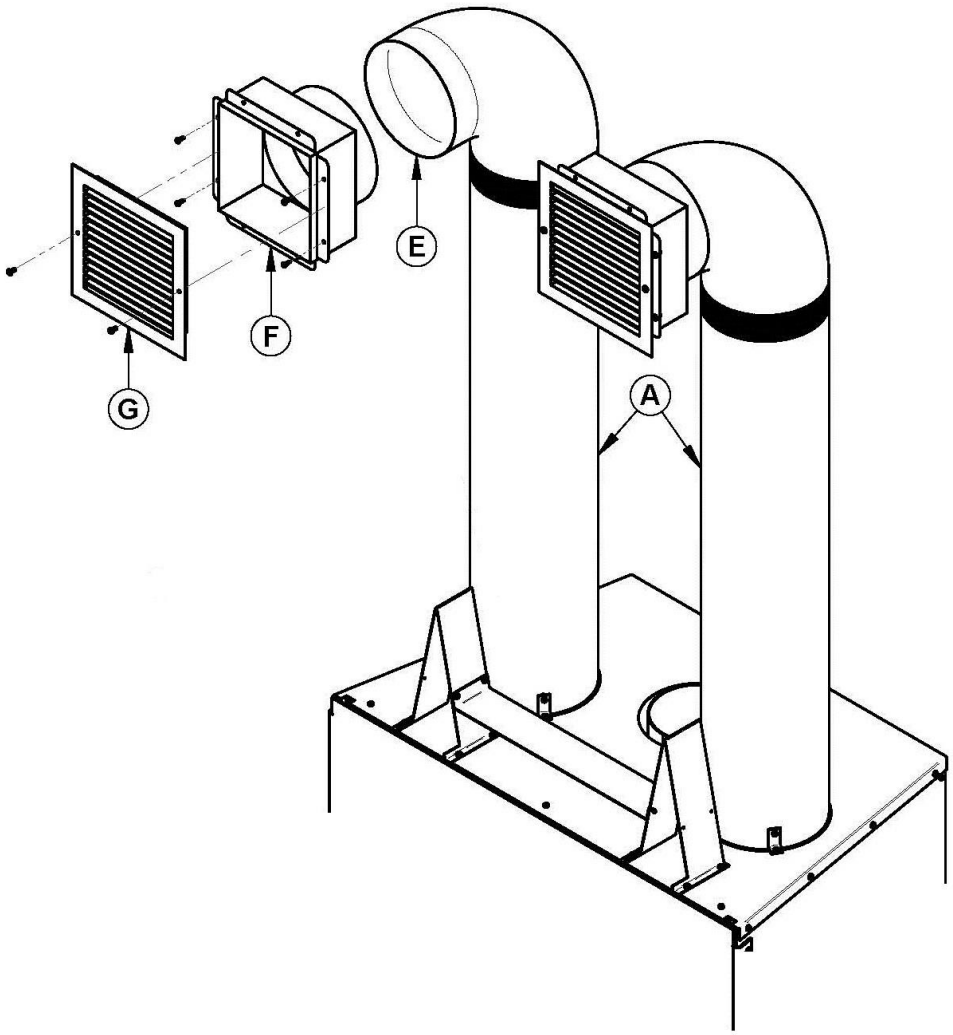

4. Maintain at least a 2" (50 mm) clearance between the ducts and the firestop; the required hole size for the hot air grilles (outlet) is 8¼" × 8¼" (210 mm × 210 mm).

5. The maximum number of elbows in a run of duct is two.

6. Maintain at least 10" (254 mm) clearance from the outlet grille framing to a combustible ceiling, side wall or mantel.

7. When passing through a combustible wall or floor, a firestop must be installed at the wall or floor penetration. The hole size must be in accordance with the duct manufacturer's instructions.

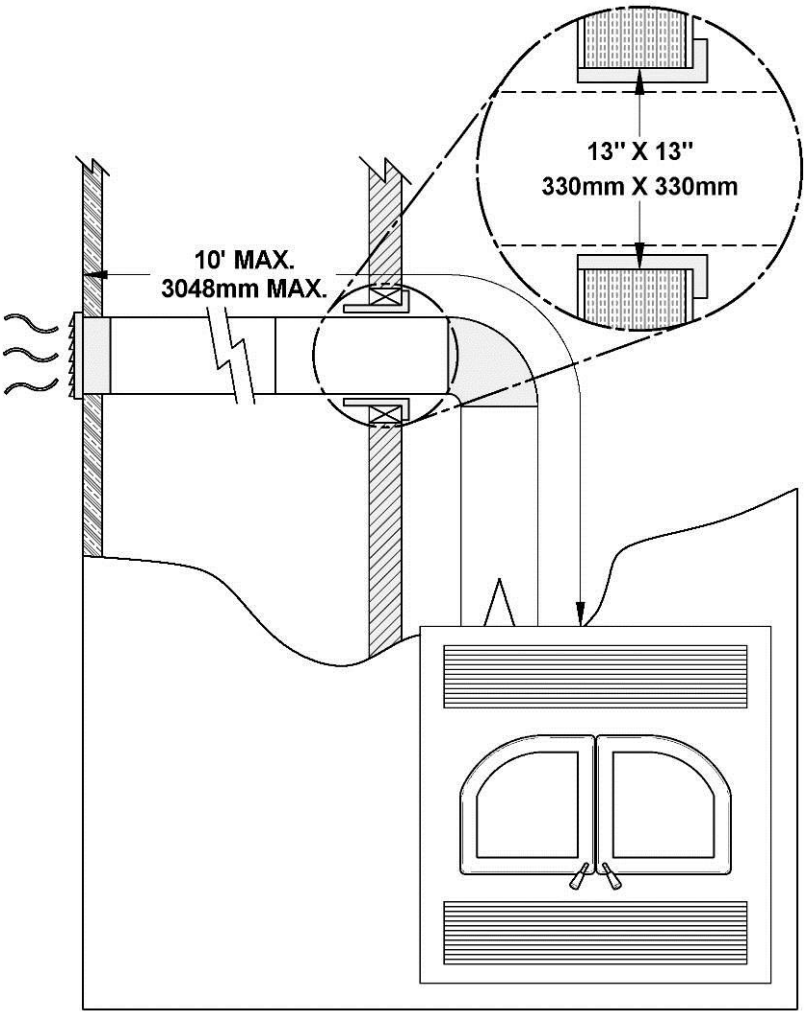

8. Do not connect the hot air ducts to a central heating system. Malfunction of the heating system's fan will cause the fireplace to overheat.

9. Do not use insulated flexible ducts as they may overheat.

10. Do not use tees or any other components than the ones specifically listed here.

11. All ducts must extend upwards or horizontally. **Never route the ducting downwards.**

12. The hot air outlet grilles must be installed with the louvers pointing downwards in order to prevent overheating adjacent ceilings.

13. Always install the two outlet grilles when using the hot air gravity distribution kit and blocking the upper louver of the fireplace.

Hot air gravity distribution kit - Modern with adjustable pipes (AC01389)

The kit includes:

- Decorative plate (A)
- Adjustable frame (B)
- Heat distribution box (C)
- Telescoping section (D)
- Anchor plate (E)
- All screws are included

Parts not included in the kit:

- 8” rigid ducting (if required according to the desired height).

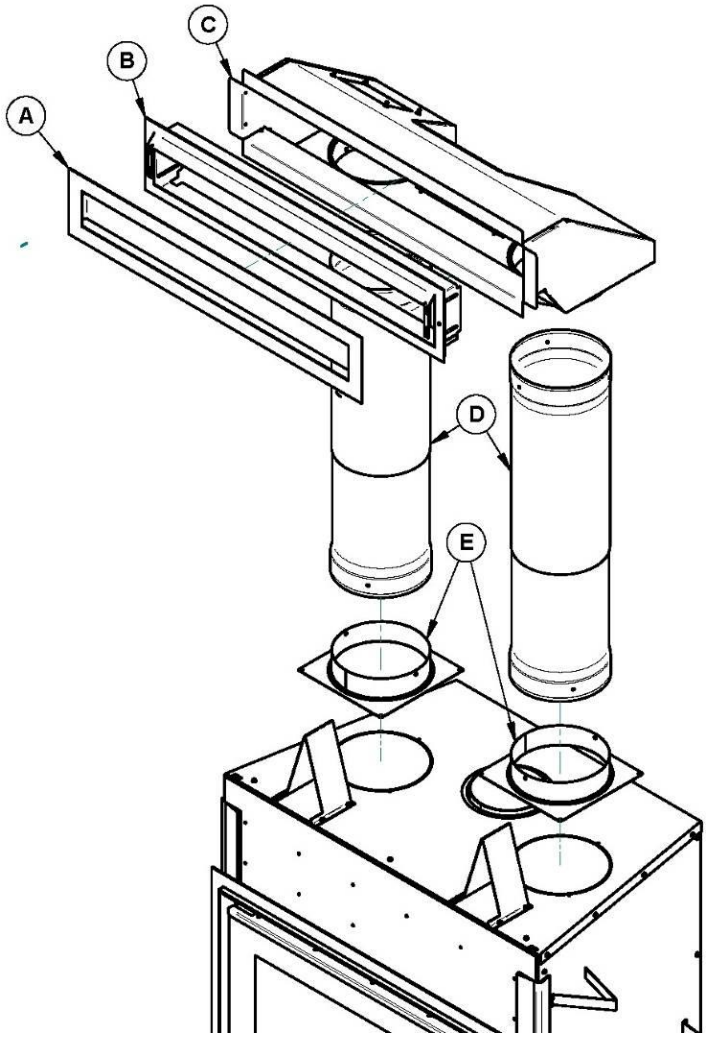

DIMENSIONS OF HEAT DISTRIBUTION BOX:

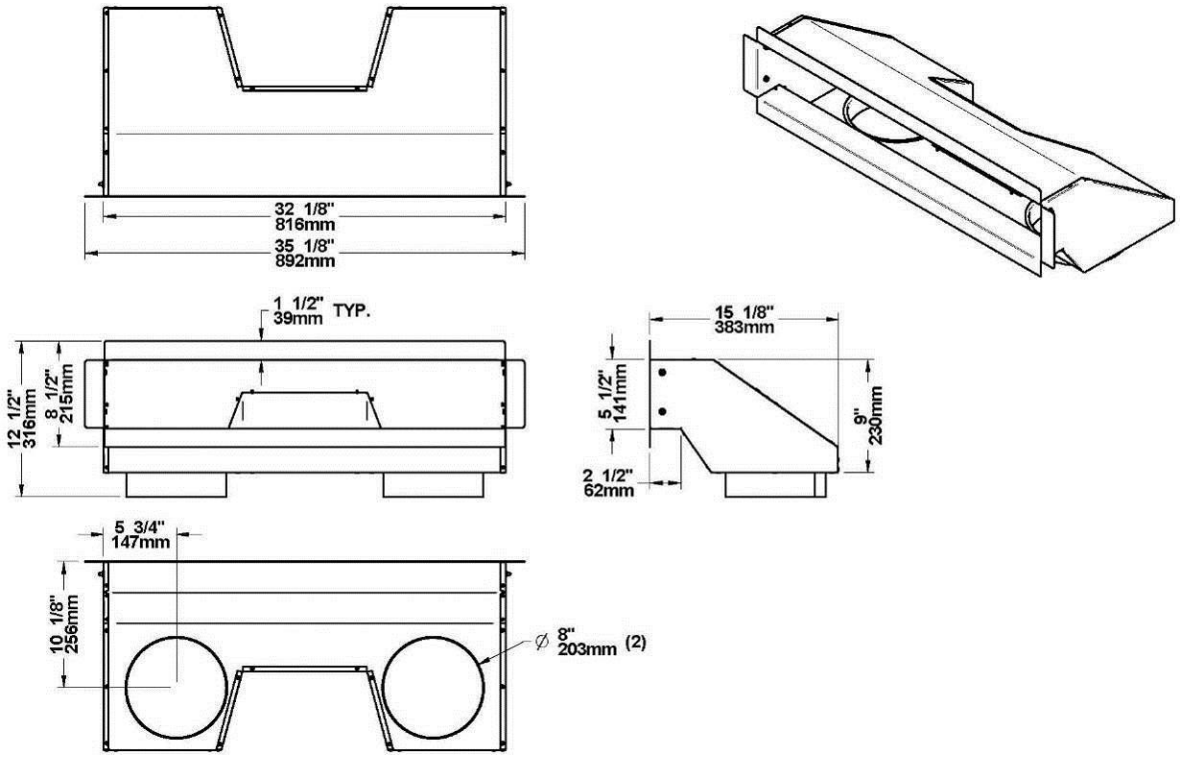

DIMENSIONS OF ADJUSTABLE DECORATIVE PLATE:

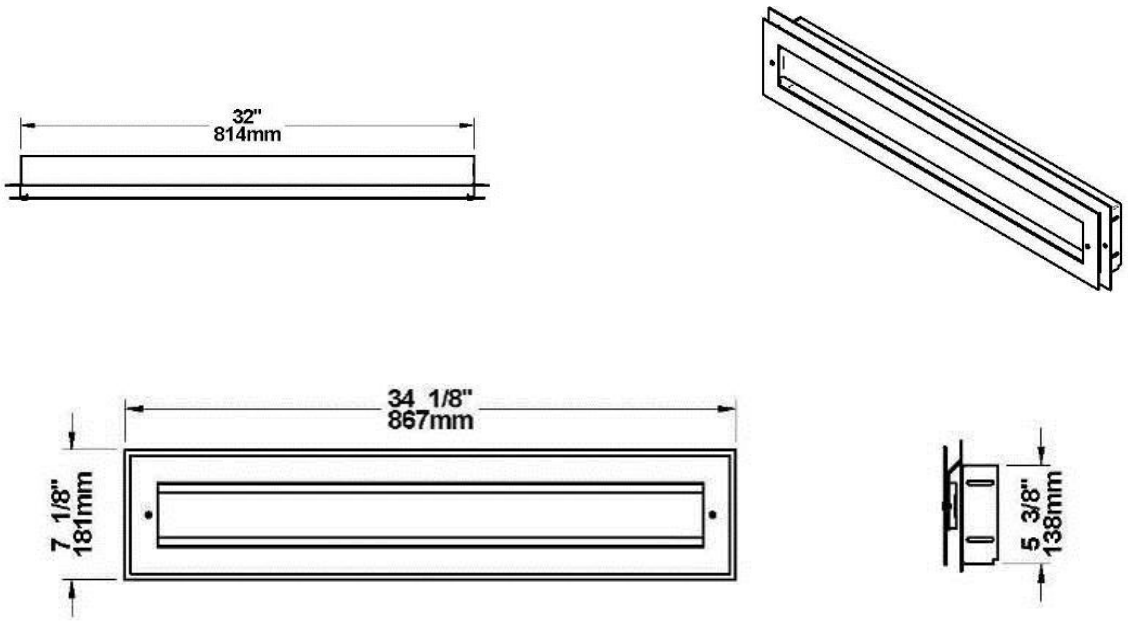

DIMENSIONS OF ASSEMBLED HEAT DISTRIBUTION BOX AND ADJUSTABLE DECORATIVE PLATE:

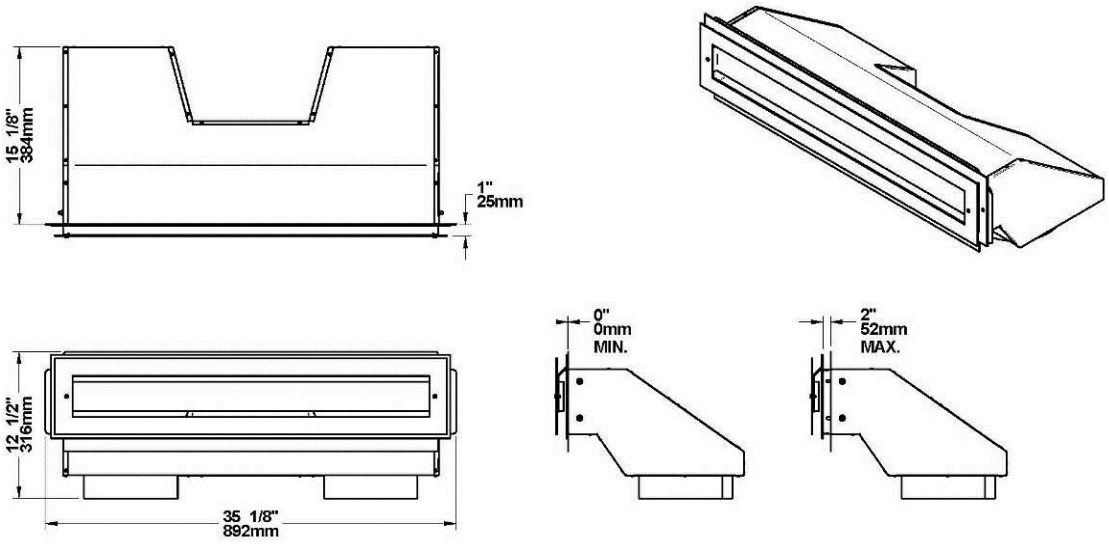

DIMENSIONS OF TELESCOPING SECTION

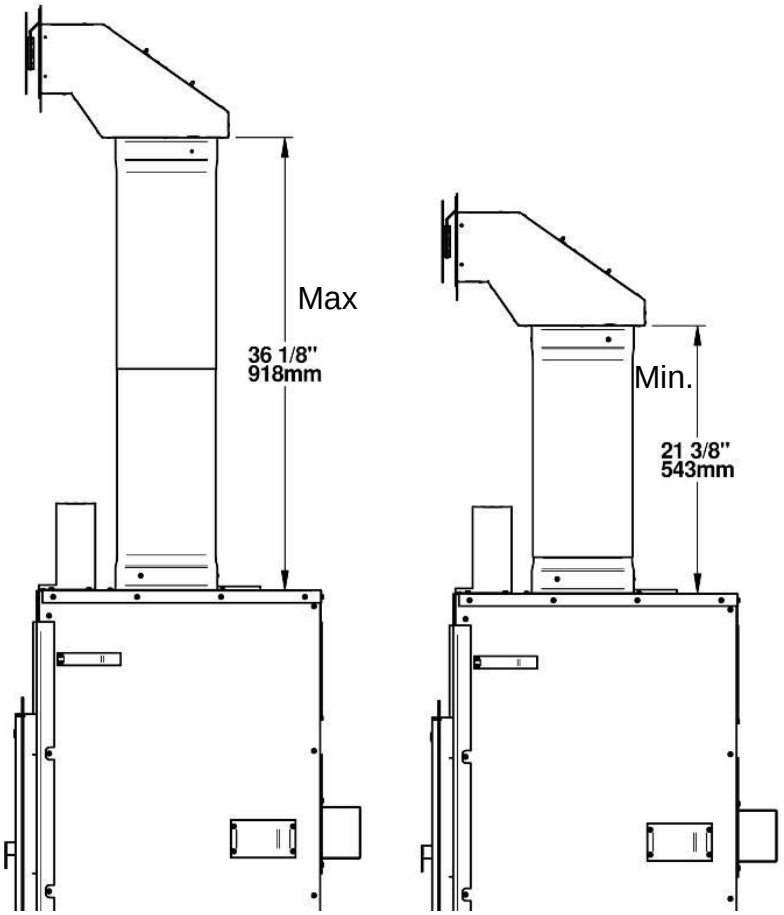

The duct system must be installed respecting the following:

1. It is recommended to wear gloves to perform this procedure. Remove the plates closing up the 8" dia. holes on top of the fireplace. Then, cut and remove the insulation in order to obtain two 8" dia. openings. Then, remove the plates closing up the 8" dia. holes inside the fireplace.

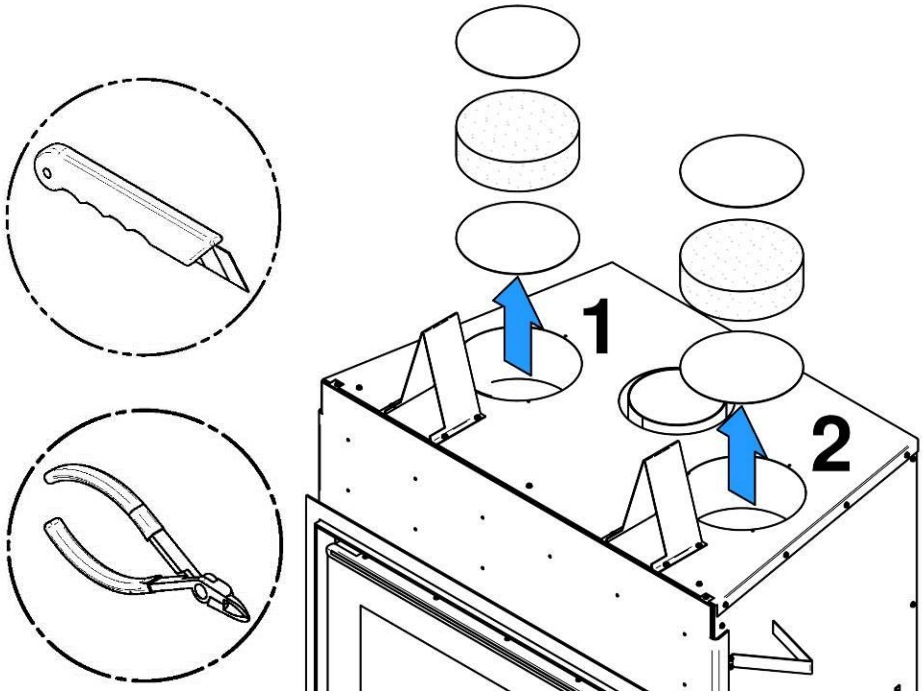

2. Secure the 2 anchor plates (C) with 8 screws provided (B) on top of the fireplace (4 for each anchor plate). Insert the telescoping section (A) into each anchor plate and secure it with 6 other self-tapping screws provided (B).

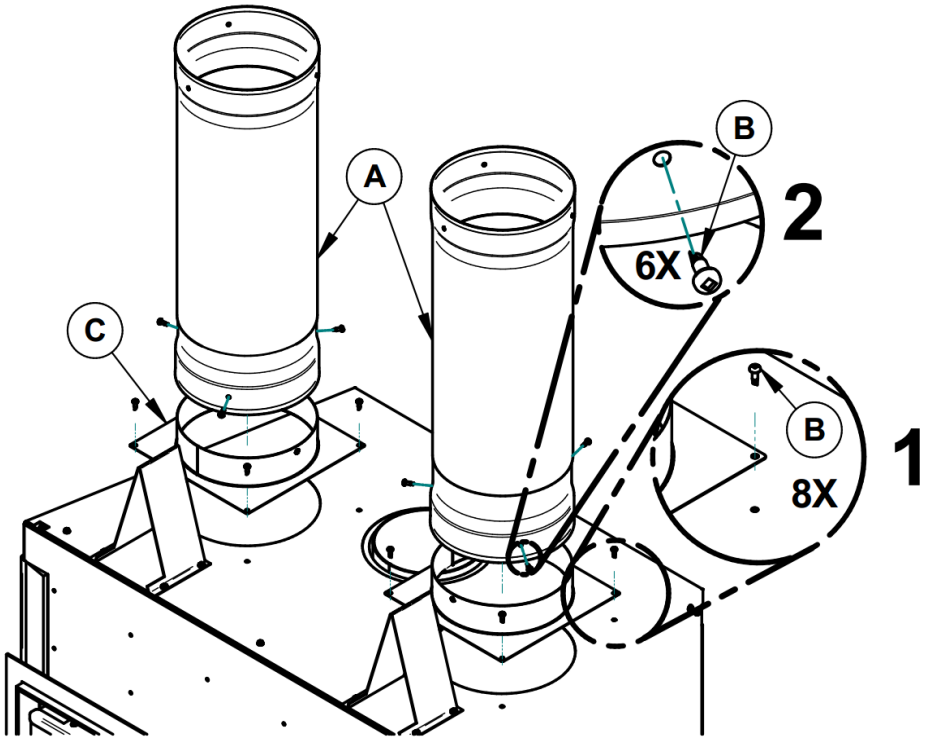

Secure the telescoping sections (A) to the heat distribution box (C) with self-tapping screws (B) (3 per telescoping section). Determine the needed height and secure the two parts of the telescoping sections together with 3 self-tapping screws provided. Insert the adjustable frame (D) in the heat distribution box (C), press it against the non-combustible finishing material and secure with 4 screws into the heat distribution box. Set the decorative plate (E) to the adjustable frame (D).

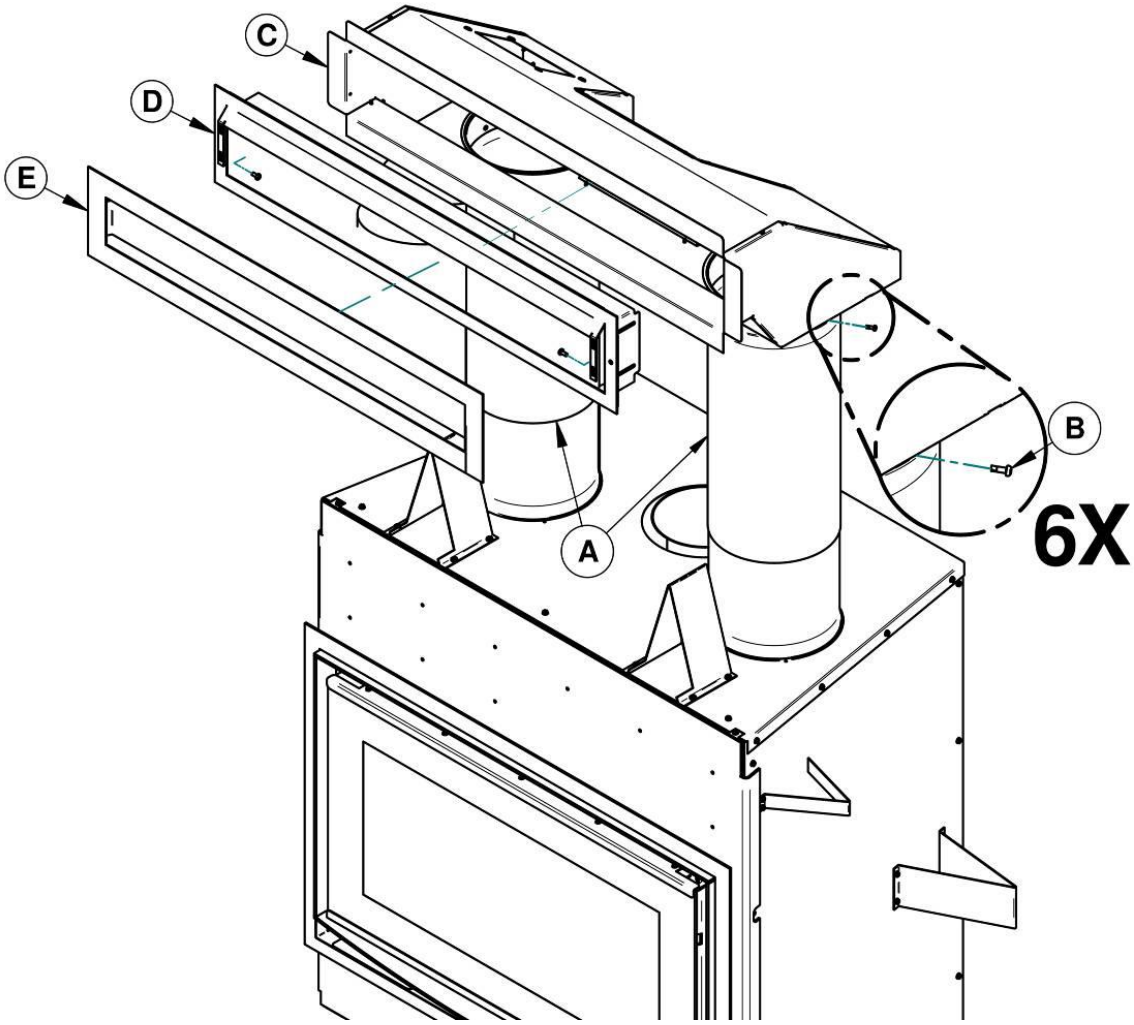

Forced Air Distribution Kit* (AC01340)

It is possible to connect a forced air distribution kit on the back or on either side of the Stratford. This kit allows distributing heat to another room up to 50 feet (15 m) of the fireplace. The insulated flexible pipe (not included in the kit) must be HVAC type pipe and must comply with ULC S110 and/or UL 181, Class 0 or Class 1 Standards and must withstand temperatures up to 250 °F. For the complete installation procedure, see the installation manual provided with the kit. You can also download this manual at **www.osburn-mfg.com**.

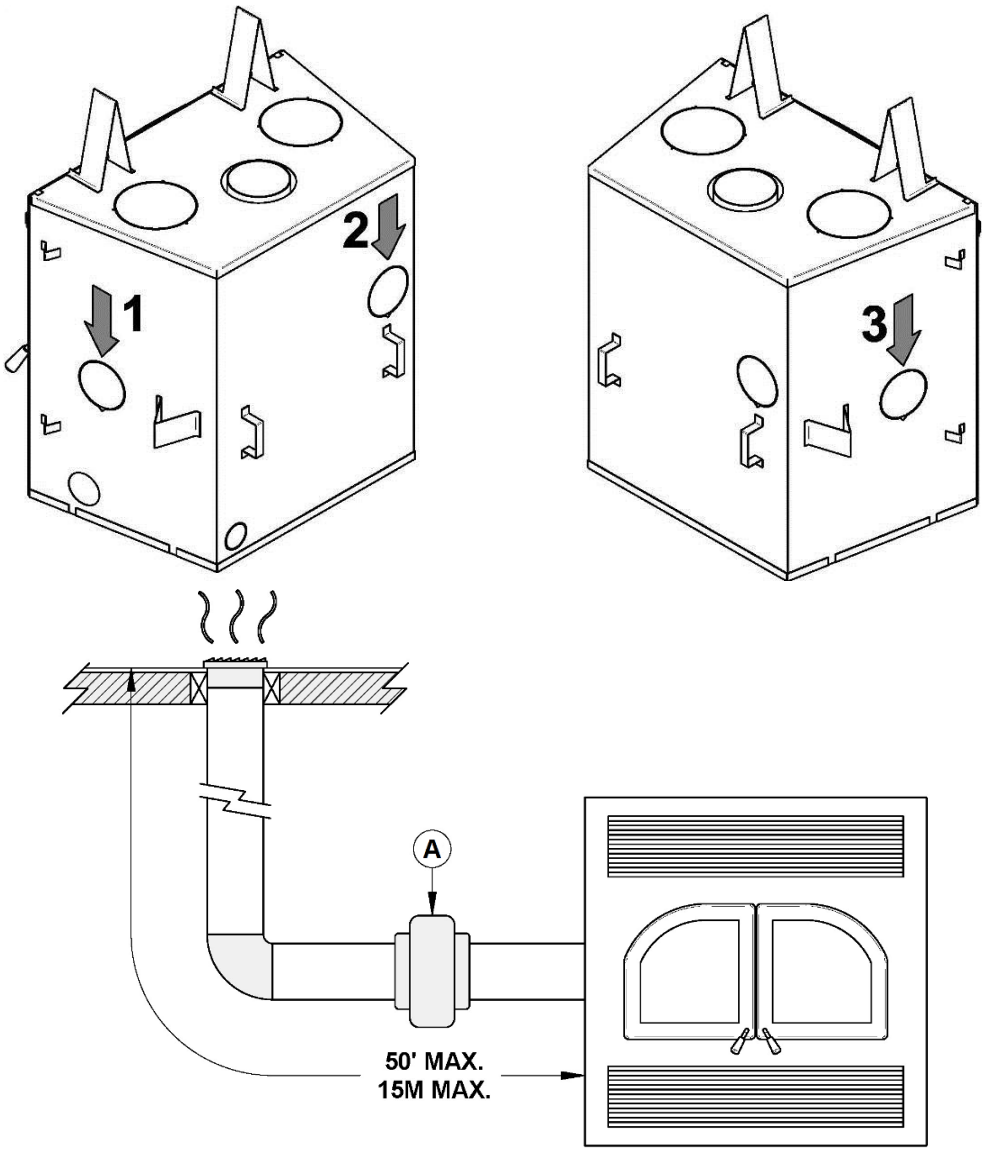

* *The EPA standard states that it is necessary to perform certification testing with any ventilation that is likely to alter the units' performance. For this reason, SBI has tested the effects of the forced air kit on the emissions of fine particles. Due to the design of our appliance and more specifically to the temperature sensor that is installed to control stops and starts, the forced ait kit does not affect the emission results. In fact, this option promotes the recovery of excess heat to later redistribute it to other rooms. During our testing, it was noted that the convection blowers underneath the firebox had more of an effect on the fine particles emission due to the air being directed onto the firebox thus cooling the unit. However, this appliance has already been tested for emission with one or more convection blowers. In conclusion, we have satisfied the environmental requirements efficiently.*

APPENDIX 2: BLOWER MAINTENANCE OR REPLACEMENT

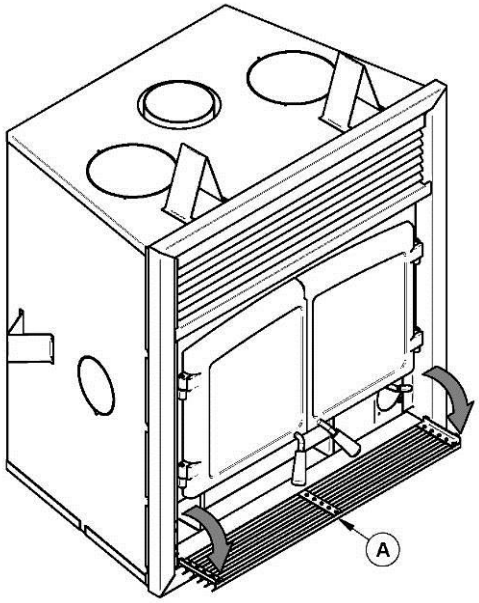

1. Open the bottom louver (A).

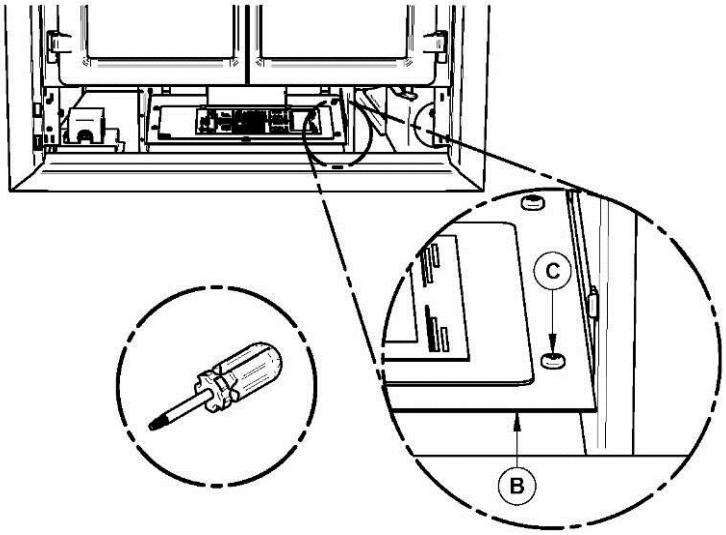

2. With a short square head screwdriver, remove the 4 screws (C) holding in place the heat shield (B).

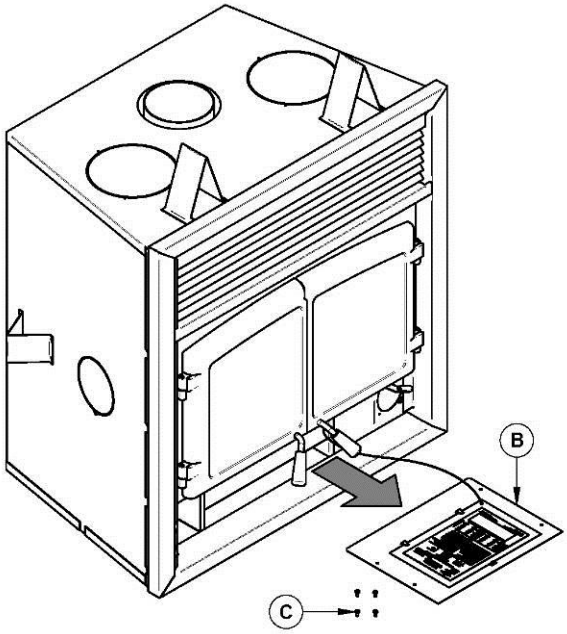

3. Remove and keep the heat shield (B) and the 4 screws (C).

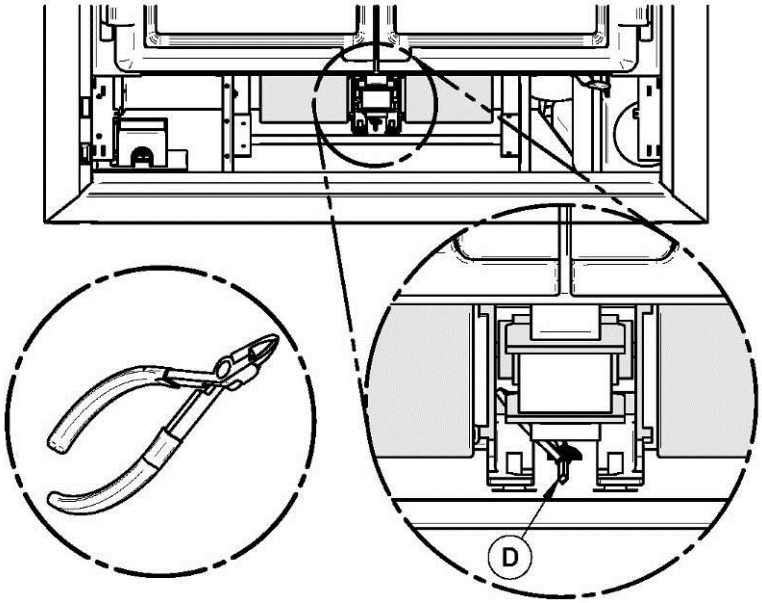

4. Cut the Tie wrap (D)

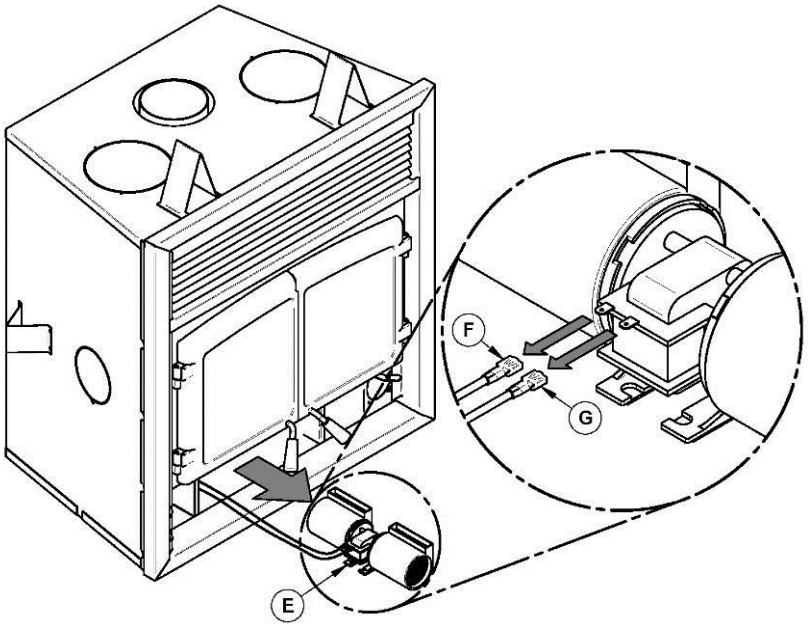

5. Unplug the blower's electric wires (F) and (G).
6. Lift the blower (E) located under the firebox towards the back.
7. Turn 90° to pull out.

Repeat the steps in reverse order to reinstall the fan.

Blower connection

Have the wiring installed by a qualified electrician. Connect the wires from the power outlet to the terminal block, making sure that the white wire matches the white wire on the terminal. Connect the black wire with the black wire of the terminal block. The ground (green or skinned wire) must be attached to the fireplace metal frame.

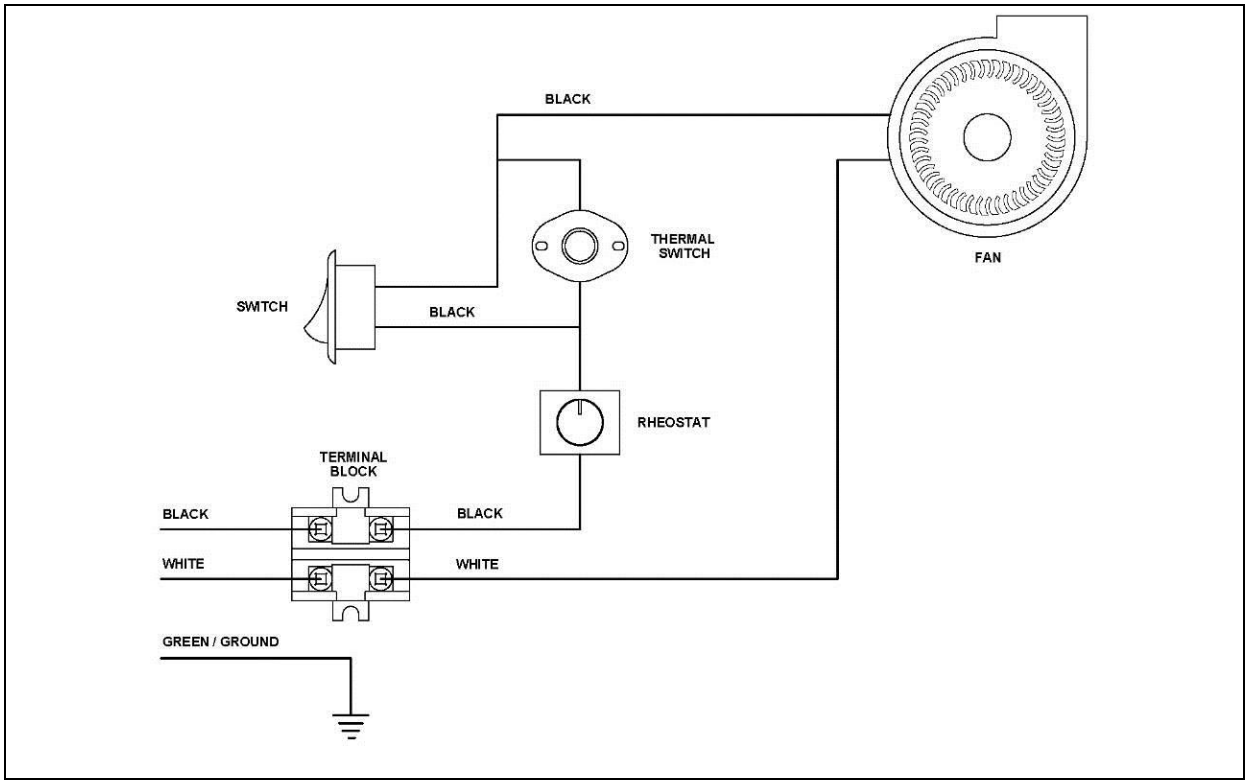

APPENDIX 3: INSTALLING THE OPTIONAL DOOR OVERLAY

In order to complete the assembly of your Stratford wood fireplace, you need to install the door overlay. See figure below for installation instructions:

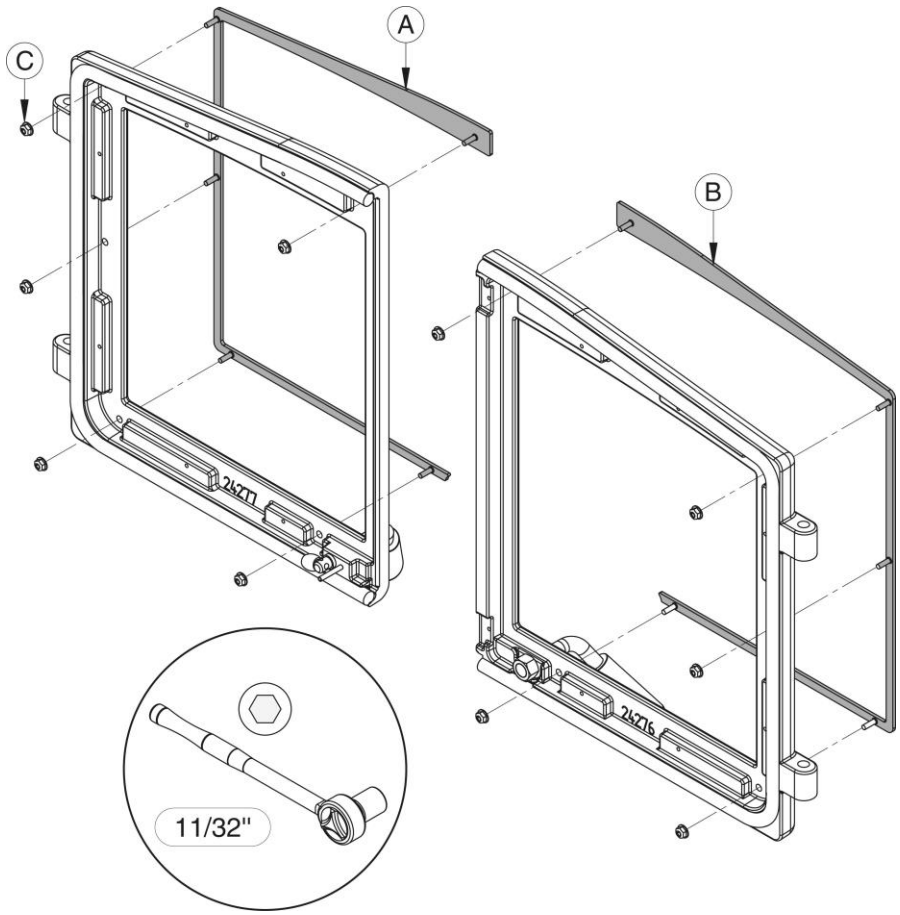

Position the overlays (A) and (B) on the door frames and secure them from the inside of the doors using the 10 included nuts (C). To facilitate the installation, do not tighten the screws until they are all installed.

Note: It is not necessary to remove the glass or any other component to install the overlay.

APPENDIX 4: INSTALLING THE FRESH AIR INTAKE KIT

During operation, the fireplace requires fresh air for combustion and draws air out of the house. It may starve other fuel burning appliances such as gas or oil furnaces. As well, exhaust fans may compete for air, causing negative pressure in the house, resulting in smoke entering the house from the fireplace. This situation is aggravated in modern airtight houses. To overcome this problem, we strongly recommend that you bring fresh air to the fireplace. **Check with local authorities having jurisdiction in your area, it may be mandatory.**

If more fresh air is needed (airtight house or conduit exceeding 10 ft. or 3 m), two intakes may be installed, providing twice the quantity of incoming fresh air; you may also increase both conduits to 4 inches, with the use of a 3 to 4-inch adaptor, again increasing substantially the quantity of incoming fresh air.

THE INSULATED FLEXIBLE PIPE LENGTH SHOULD BE SUFFICIENT AND HAVE A CONFIGURATION TO AVOID CONDENSATION.

THE OUTSIDE WALL TERMINATION MUST NOT BE INSTALLED AT MORE THAN 50% OF THE TOTAL HIGHT OF THE CHIMNEY AND AT THE MOST 10 FT. (3 M) ABOVE THE BASE OF THE FIREPLACE.

THE FRESH AIR MUST COME FROM OUTSIDE THE HOUSE. THE AIR INTAKE MUST NOT DRAW AIR FROM THE ATTIC, FROM THE BASEMENT, OR FROM A GARAGE.

THE OUTSIDE WALL TERMINATION SHOULD BE INSTALLED WHERE IT IS NOT LIKELY TO BE BLOCKED BY SNOW OR EXPOSED TO EXTREME WIND AND AWAY FROM AUTOMOBILE EXHAUST FUMES, GAS METER AND OTHER VENTS.

The fresh air intake kit included with the fireplace contains the following components:

a. One (1) 3" adaptor;
b. One (1) air inlet block-off plate;
c. Six (6) screws;
d. One (1) 3” to 4” adaptor.

The following component is not included:

a. The outside air inlet cap;
b. The 2 adjustable straps;
c. A 3" or 4" insulated flexible pipe (This HVAC type pipe must comply to ULC S110 and/or UL 181, Class 0 or Class 1 Standards and must withstand temperatures up to 250 °F.

Note: Only remove the knock-out that will be connected to the fresh air inlet.

The fresh air intake kit may be installed on three different places on the fireplace.

1- On the right side of the appliance (most common).
2- On the right side, at the back of the appliance.
3- On the right side under the appliance.

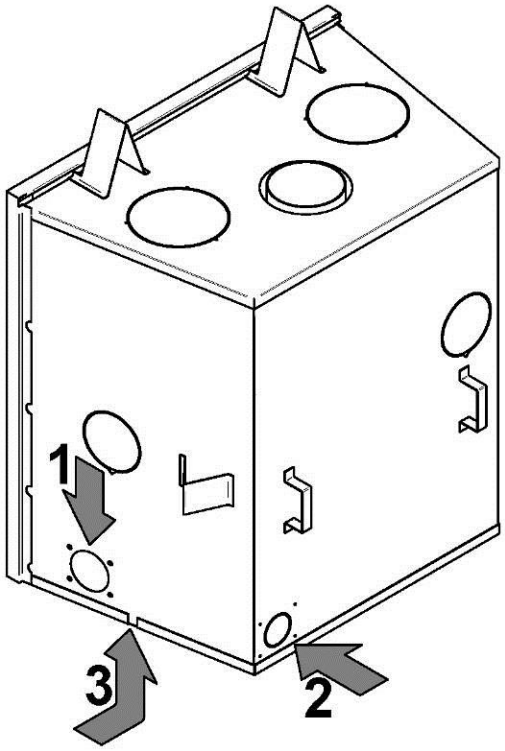

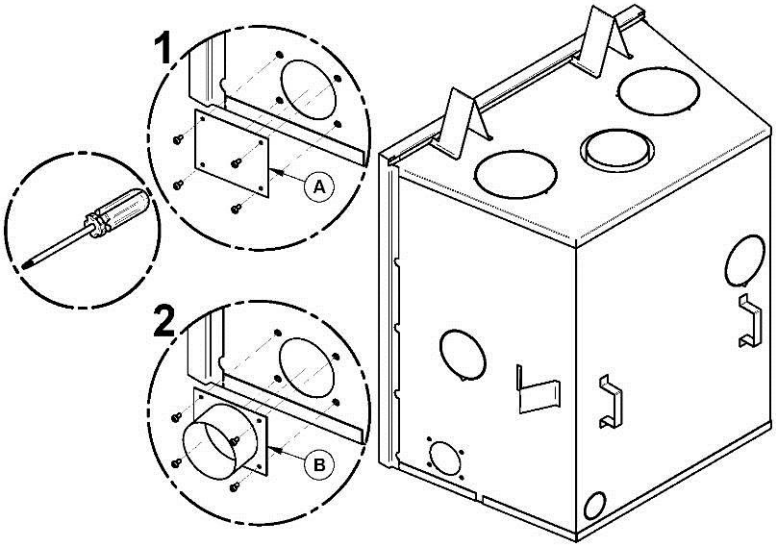

(1) Using a Philips screwdriver, remove the four screws holding the rectangular plate **(A)** on the right of the fireplace jacket. If the location 2 or 3 has been chosen, use pliers to remove the knock-out.

(2) Secure the fresh air intake kit adapter **(B)** on the fireplace jacket using the 4 screws provided with the kit.

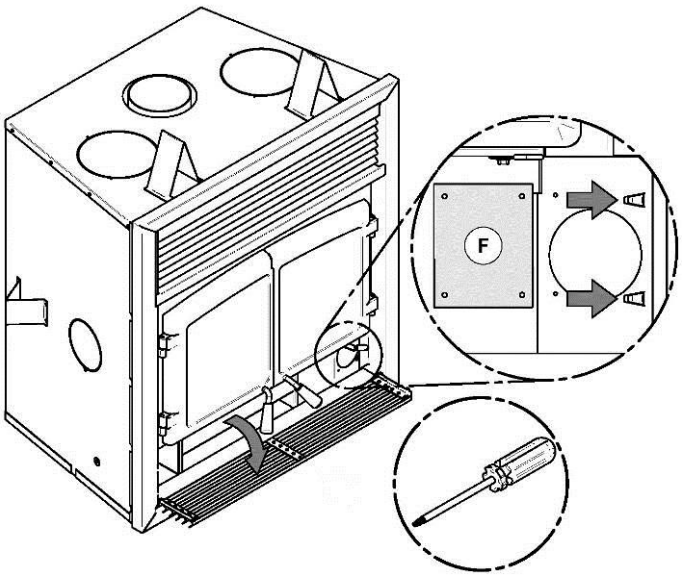

Flip the fireplace's lower decorative louver. Install the blocking plate (F) included in the kit, on the front opening of the air control housing. Using a screwdriver, secure with two screws.

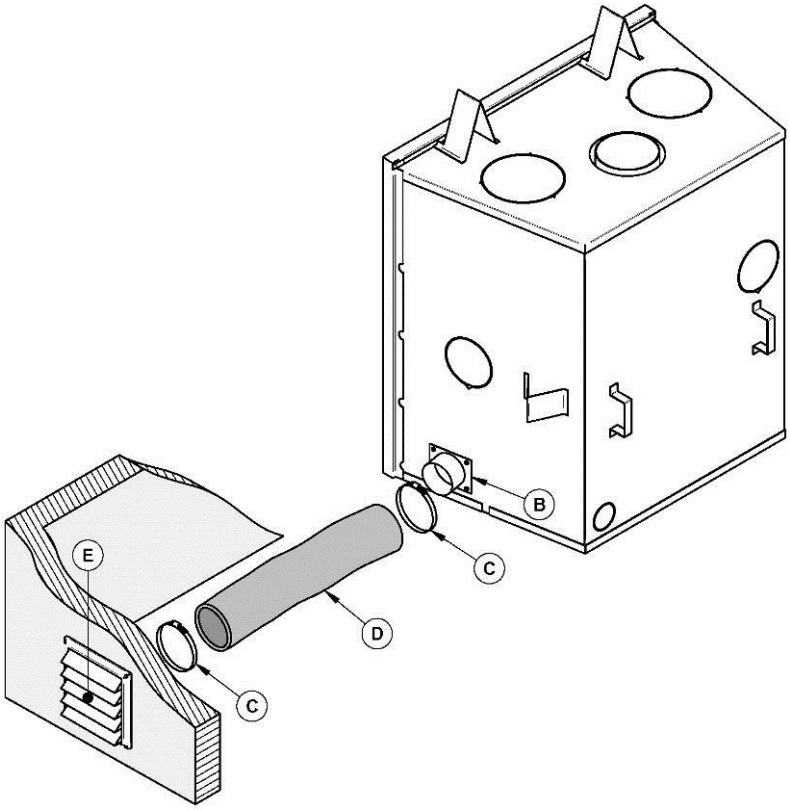

Then, install the flexible pipe* **(D)** (not supplied) to the fresh air intake adapter **(B)** using one of the adjustable pipe clamps **(C)**. Secure the other end of the pipe to the outside wall termination **(E)** using the second adjustable pipe clamp **(C)**. The outside wall termination **(E)** must be installed outside of the building.

*Use the length required for your installation while respecting the maximum length of 30 ft (9 m). To avoid condensation, it is recommended to use an insulated pipe long enough and containing a "P-Trap" loop. This configuration can be found inside the chase, but must always maintain clearances to combustibles.

To complete the installation, make a hole of1/4" to 1/2" (6 mm à 13 mm) bigger than the insulate pipe diameter in the outside wall of the house at the chosen location. From outside, place the outside air inlet cap in the hole (open side down) and fasten the register to the wall, with screws as shown bellow. Place the insulated pipe over the register tube and over the fireplace outside air connector. At each end, carefully pull back the insulation and plastic cover, exposing the flexible pipe. Attach the flexible pipe using pipe clamps. For a better seal, you may also use aluminum tape. Wrap the tape around the joint between the flexible pipe and the air inlets. Carefully push the insulation and plastic cover back over the pipe. Fix the plastic in place using aluminum tape.

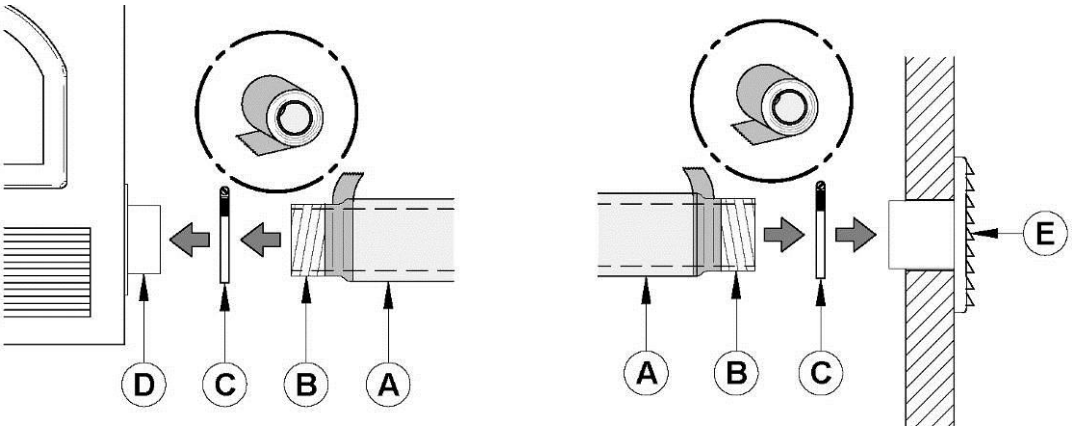

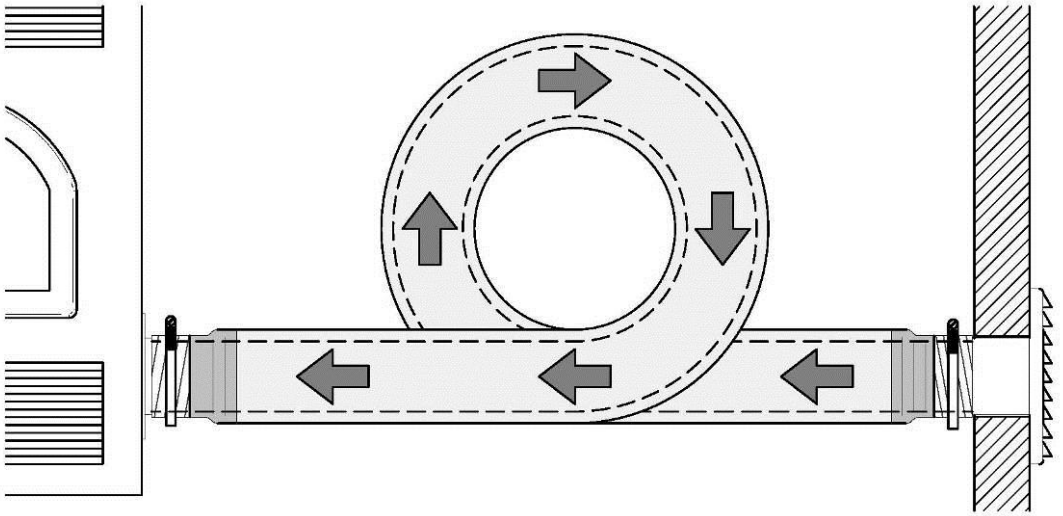

APPENDIX 5: INSTALLING THE OPTIONAL FIRESCREEN (AC01560)

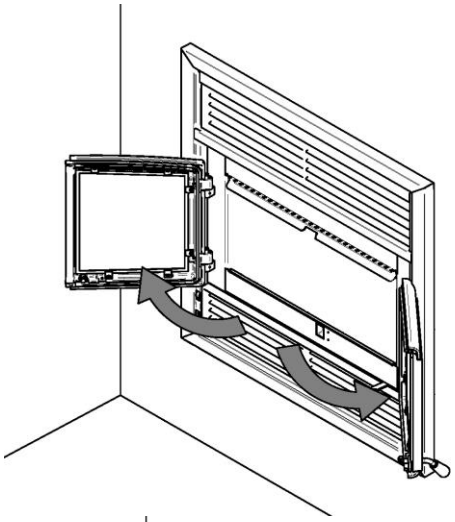

Open the doors.

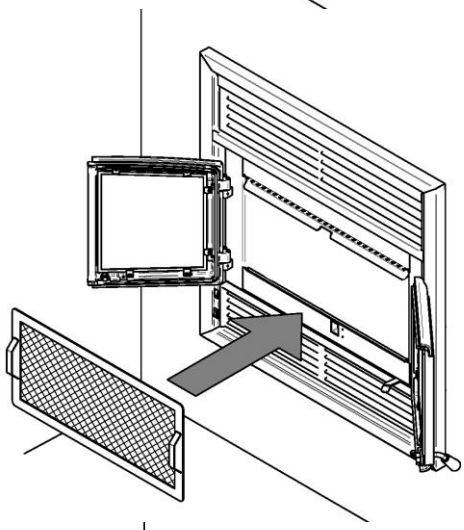

Hold the firescreen by the two handles and bring it close to the door opening.

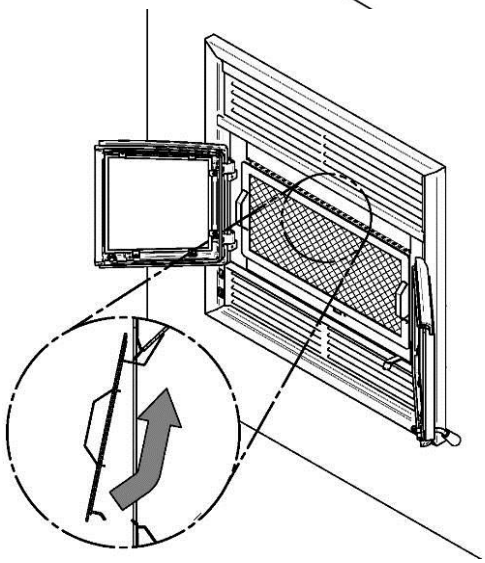

Lean the upper part of the firescreen against the top door opening making sure to insert the top firescreen bracket behind the primary air deflector as in (DETAIL A).

Lift the firescreen upwards and push the bottom part towards the stove then let the firescreen rest on the bottom of the door opening.

Warning: Never leave the stove unattended while in use with the firescreen.

APPENDIX 6: INSTALLATION OF SECONDARY AIR TUBES AND BAFFLE

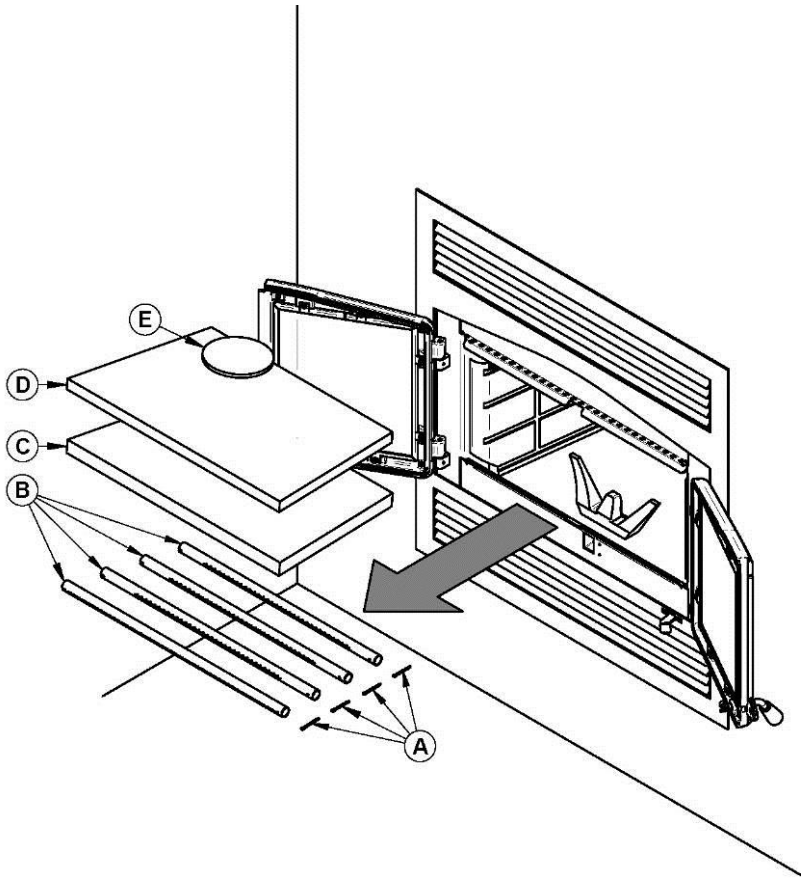

REMOVABLE PARTS	
A	Cotter pins **(x4)**
B	Air tubes **(x4)**
C	C-cast baffle **(x1)**
D	Baffle insulation **(x1)**
E	Baffle insulation weight **(x1)**

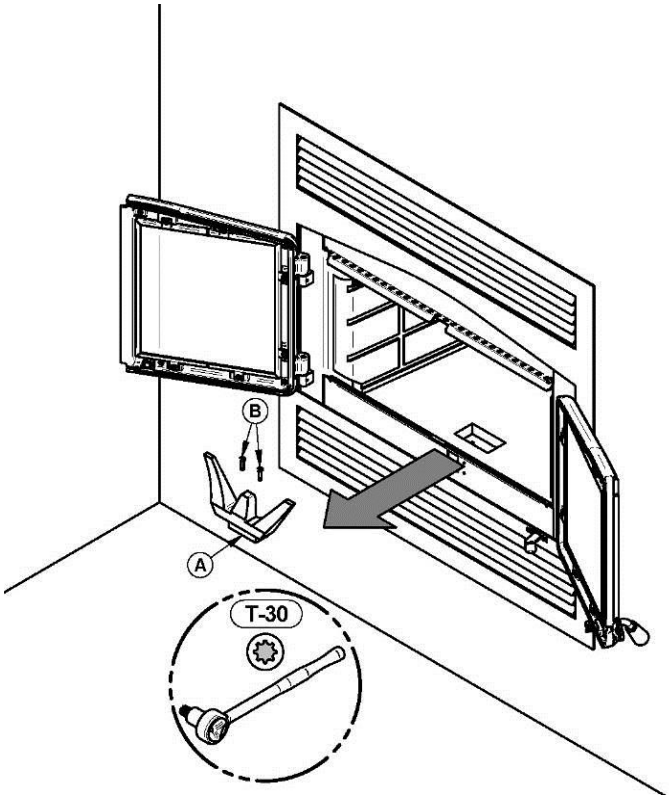

1. Using a ratchet key and a Torx (T-30), unscrew the two Torx screws (B) holding up the andiron (A).

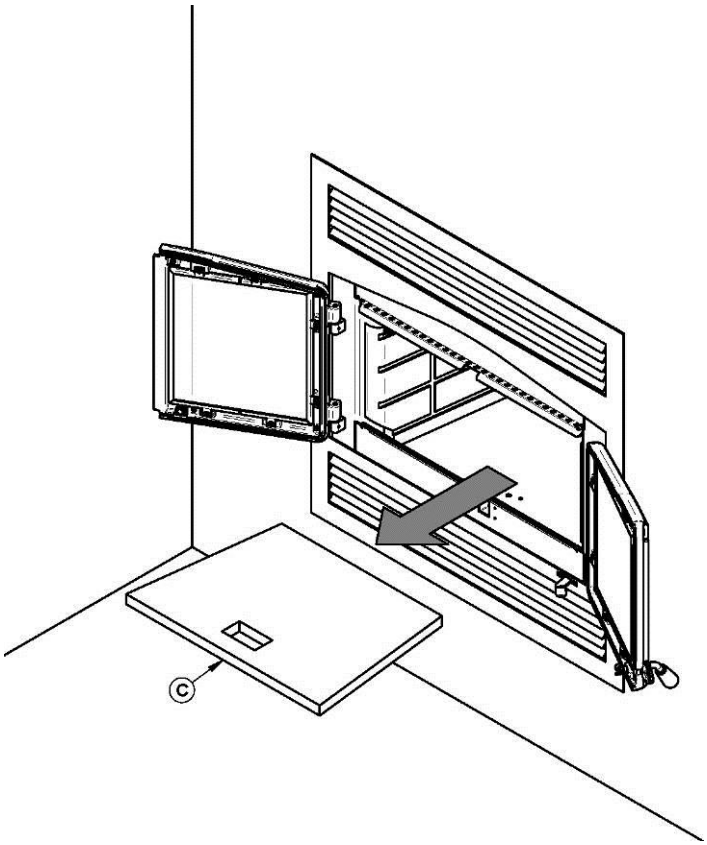

2. Remove the floor refractory slab (C).

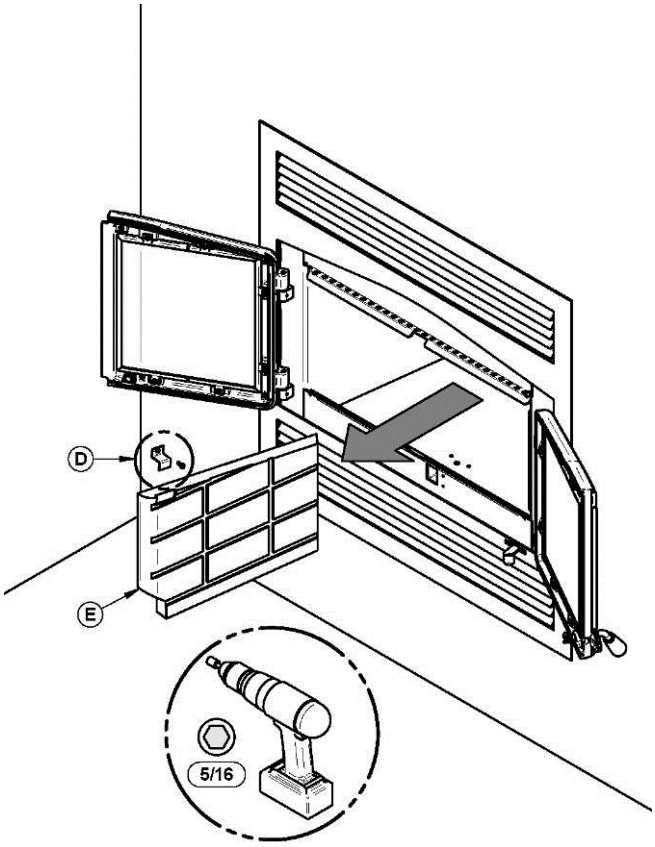

3. Using a power screwdriver and hex tip 5/16", remove the slab holder (D) and the left refractory slab (E).

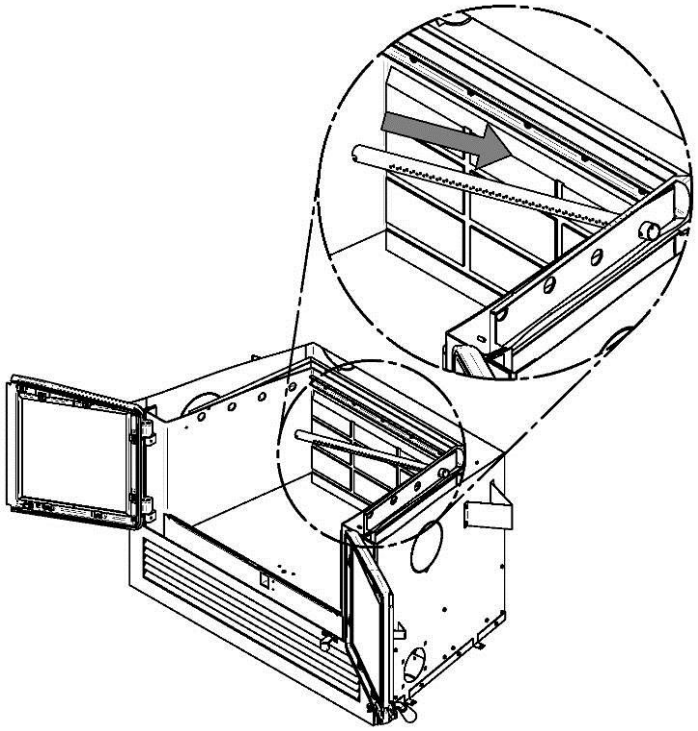

4. Starting with the rear tube, lean and insert the right end of the secondary air tube into the rear right channel hole. Then, lift and push the tube towards the right inside the hole in the right channel.

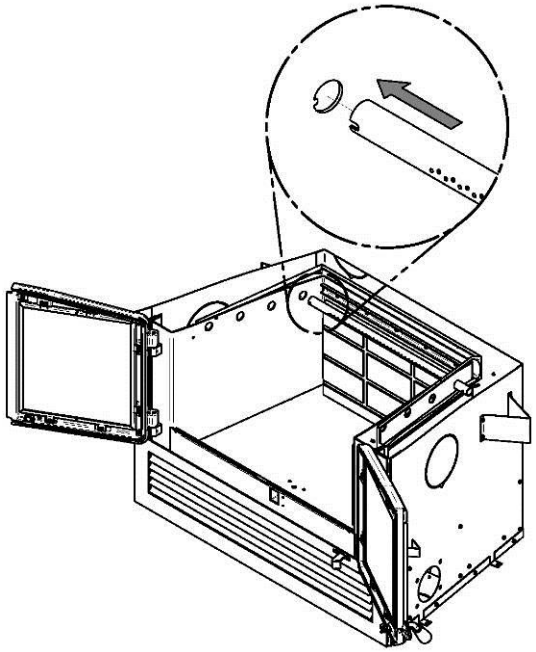

5. Align the notch in the left end of the tube with the tab of the left air channel hole.

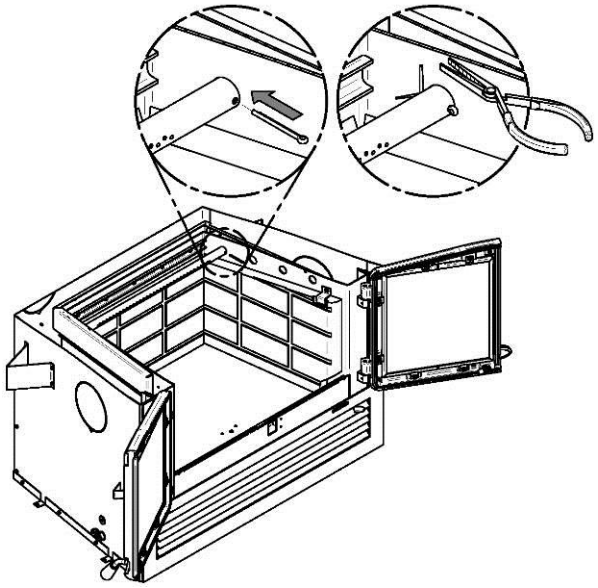

6. Insert a cotter pin in the last hole on the right side of the tube. Then bend the tabs on the pin to keep in place.

7. Repeat **steps 4, 5** and **6** for the two tubes in the back then install the baffle. Then, install the two front tubes.

8. To remove the tubes use the above steps in reverse order.

Note that secondary air tubes can be replaced without removing the baffle board.

Important Notes:

The air tubes are identified for placement as follows:

Model	Type of tube
Stratford fireplace	Front ► 95 holes of 0.141" Middle front ► 67 holes of 0.125'' Middle rear ► 67 holes of 0.109'' Rear ► 67 holes of 0.101''

APPENDIX 7: EXPLODED DIAGRAM AND PARTS LIST

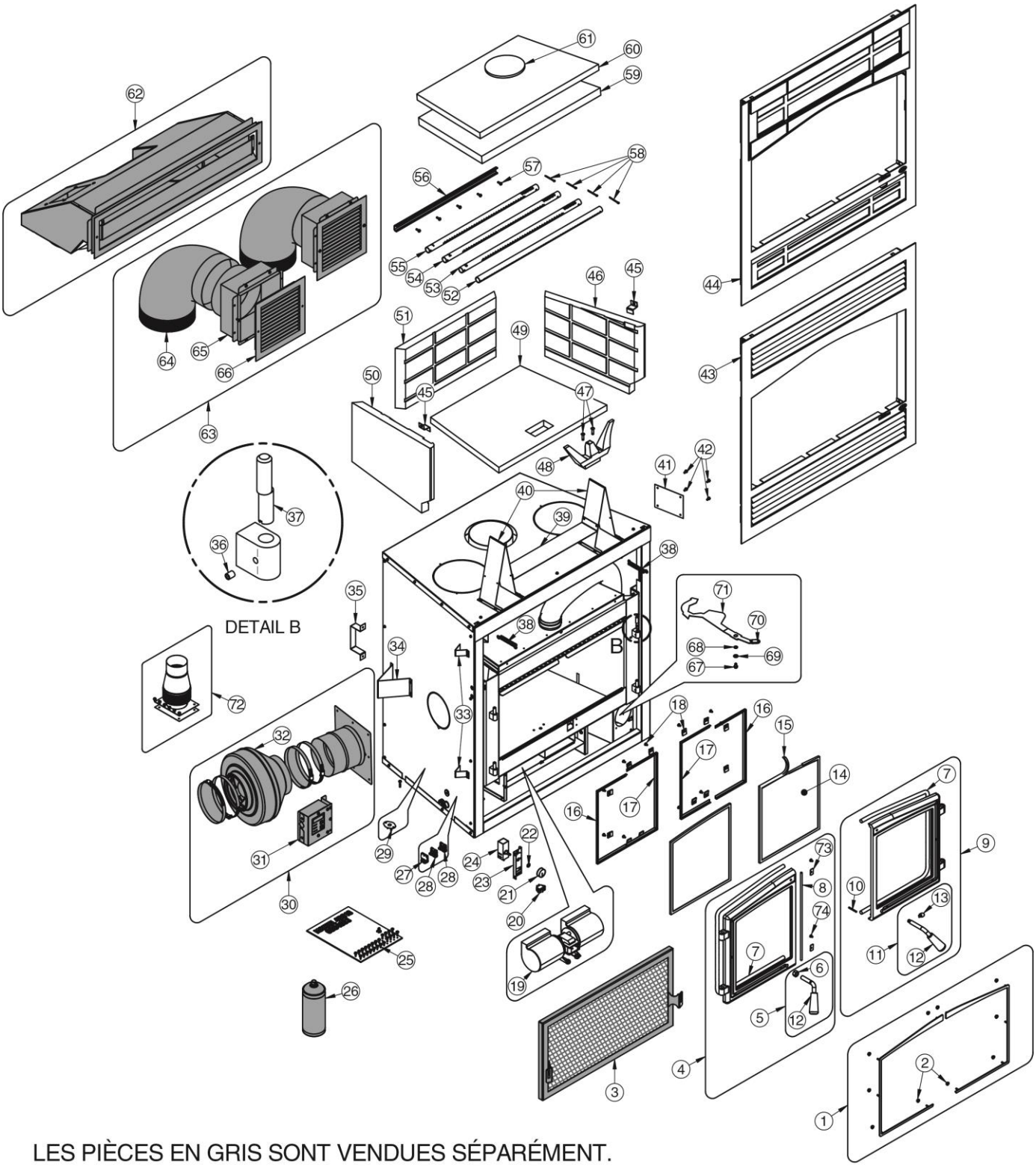

IMPORTANT: THIS IS DATED INFORMATION. When requesting service or replacement parts for your stove, please provide the model number and the serial number. We reserve the right to change parts due to technology upgrade or availability. Contact an authorized dealer to obtain any of these parts. Never use substitute materials. Use of non-approved parts can result in poor performance and safety hazards.

#	Item	Description	Qty
1	OA10612	BRUSHED NICKEL STEEL DOOR OVERLAY	1
1	OA10610	BLACK STEEL DOOR OVERLAY	1
2	30985	FLANGED PUSH NUT	8
3	AC01560	RIGID FIRESCREEN	1
4	SE24276	STRATFORD LEFT DOOR WITH HANDLE AND GASKET	1
5	AC09193	LH SIDE BENT HANDLE REPLACEMENT KIT	1
6	30039	NUT 1/2-20	1
7	AC06100	SILICONE AND 1/4'' X 1/2'' X 8' BLACK DOOR GASKET KIT	2
8	40030	ROUND ROPE 1/4" WITH ADHESIVE	2
9	SE24277	STRATFORD RIGHT DOOR WITH HANDLE AND GASKET	1
10	30101	SPRING TENSION PIN 5/32"Ø X 1 1/2"L	1
11	AC09162	RIGHT HAND SIDE REPLACEMENT HANDLE AND LATCH KIT	1
12	30569	ROUND WOODEN HANDLE BLACK	2
13	AC09185	DOOR LATCH KIT	1
14	SE53241	REMPLACEMENT GLASS WITH GASKET 13-1/2'' X 12-3/16''	2
15	AC06400	3/4" (FLAT) X 6' BLACK SELF-ADHESIVE GLASS GASKET	2
16	PL66655	GLASS RETAINER FRAME	1
17	PL66656	GLASS RETAINER FRAME	1
18	SE53585	GLASS RETAINER KIT WITH SCREWS (12 PER KIT)	1
19	44122	DOUBLE CAGE BLOWER 176 CFM (CLASS H)	1
20	44091	ROCKER SWITCH 2 POSITION MSR-8	1
21	44085	RHEOSTAT KNOB	1
22	44202	RHEOSTAT NUT	1
23	PL63881	RHEOSTAT BRACKET	1
24	44084	RHEOSTAT WITHOUT NUT AND FLAT WASHER	1
25	SE45919	STRATFORD INSTRUCTION MANUAL KIT	1
26	AC05959	METALLIC BLACK STOVE PAINT - 342 g (12oz) AEROSOL	1
27	60204B	TERMINAL BLOCK (END SECTION)	1
28	60204A	TERMINAL 3/8" SECTION	2
29	44028	CERAMIC THERMODISC F110-20F	1
30	AC01340	FORCED AIR DISTRIBUTION KIT 300 CFM	1
31	44125	FORCED AIR DISTRIBUTION KIT PC CARD	1
32	44142	BLOWER 6'' 300 CFM	1
33	PL63767	SHORT SIDE STANDOFF	4
34	PL63768	SIDE REAR SPACER	2
35	PL53065	REAR SPACER	2
36	30117	SOCKET SET SCREW #10-32 X 1/4"	2
37	30586	HINGE PIN	2

#	Item	Description	Qty
38	30472	SPRING 1/2'' OUTSIDE DIA. X 3''L	4
39	PL66500	TOP HEAT SHIELD	1
40	PL63766	HEADER STAND OFF	2
41	PL53026	AIR INTAKE BOX COVER	1
42	30154	BLACK SCREW #10 X 5/8" QUADREX #2 TYPE A	4
43	OA10330	TRADITIONAL STYLE FACEPLATE	1
43	OA10332	TRADITIONAL FACEPLATE WITH BRUSHED NICKEL ACCENTS	1
44	OA10331	PRAIRIE STYLE FACEPLATE	1
45	PL53145	REFRACTORY RETAINER	2
46	22140	RIGHT REFRACTORY SLAB	1
47	30506	SCREW PAN TORX TYPE F 1/4-20 X 1" BLACK	2
48	PL53144	LOG HOLDER	1
49	22137	FLOOR REFRACTORY	1
50	22139	LEFT REFRACTORY SLAB	1
51	22138	REAR REFRACTORY SLAB	1
52	PL53132	FRONT SECONDARY AIR TUBE	1
53	PL53133	FRONT CENTER SECONDARY AIR TUBE	1
54	PL53134	REAR CENTER SECONDARY AIR TUBE	1
55	PL53135	REAR SECONDARY AIR TUBE	1
56	PL53041	REAR REINFORCEMENT	1
57	30026	THREAD CUTTING SCREW 10-24 F 5/8" HEX WASHER HEAD	5
58	30068	STAINLESS STEEL COTTER PIN 1/8" X 1 1/2"	4
59	21296	C-CAST BAFFLE 24 3/16" X 20 5/8" X 14 3/4" X 1 1/4"	1
60	21148	BAFFLE INSULATION 24 3/16" X 20 5/8" X 14 3/4" X 1"	1
61	PL34026	BAFFLE INSULATION WEIGHT	1
62	AC01389	HOT AIR GRAVITY KIT	1
63	AC01375	HOT AIR GRAVITY DISTRIBUTION KIT - TRADITIONAL	1
64	49066	90° X 8" 26Ga. GALVANISED ELBOW	2
65	30640	GAKLVANISED BOX FOR HOT AIR GRAVITY DISTRIBUTION KIT 8"	2
66	30540	HOT AIR GRAVITY DISTRIBUTION KIT GRILL	2
67	30060	THREAD-CUTTING SCREW 1/4-20 X 1/2" F HEX STEEL SLOT WASHER C102 ZINC	1
68	30187	STAINLESS WASHER ID 17/64" X OD 1/2"	1
69	30185	17/64" AA TYPE WASHER	1
70	30556	AIR CONTROL FINISHING TIP	1
71	PL63866	AIR CONTROL MECHANISM	1
72	SE63886	3" FRESH AIR ADAPTER WITH 4" INCREASER	1
73	PL66525	GASKET RETAINER	2
74	30124	SCREW #8 - 32 X 5/16'' TRUSS QUADREX ZINC	2

Refractory slabs Replacement

The intense heat of the fire will normally cause hairline cracks in the refractory slabs. These cracks can be minimized by proper curing as described in “First Fires”. They will not normally diminish the effectiveness of the refractory slabs. If large cracks develop, then the refractory slabs should be replaced. To replace the refractory slabs, follow these steps:

1- Using a ratchet key and a Torx (T-30), unscrew the two Torx screws (B) holding up the andiron (A).

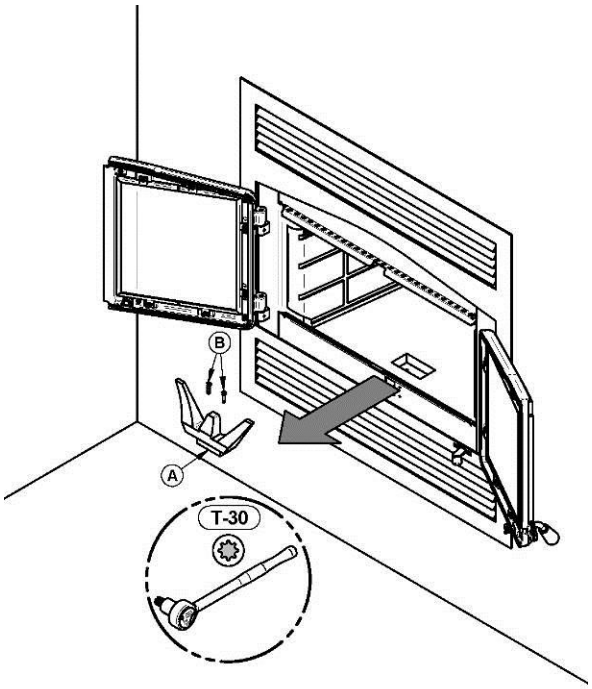

2- Remove the floor refractory slab (C).

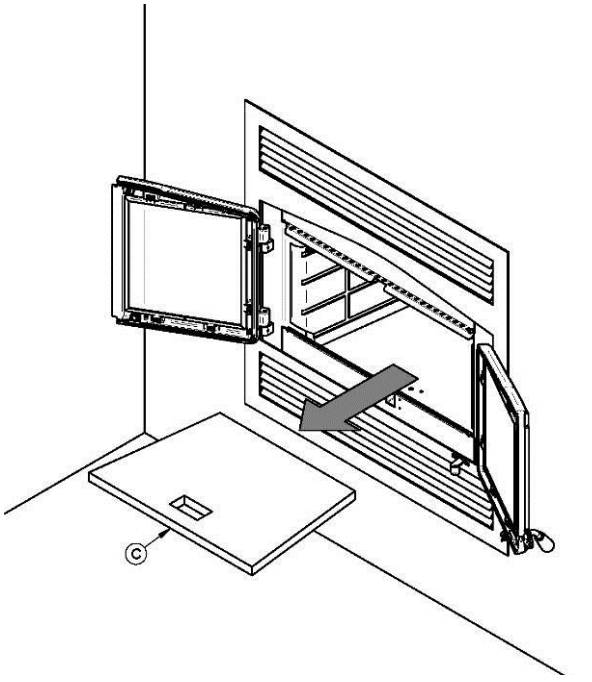

3- Using a power screwdriver and hex tip 5/16", remove the slab holders (D) and the refractory slabs (E) and (F).

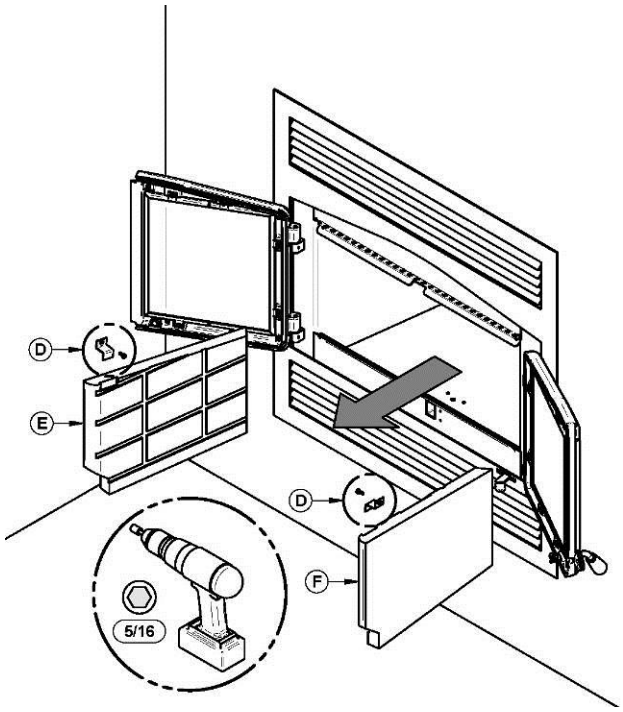

4- Remove the rear refractory slab (G).

To install new refractory slabs, follow the above steps in reverse.

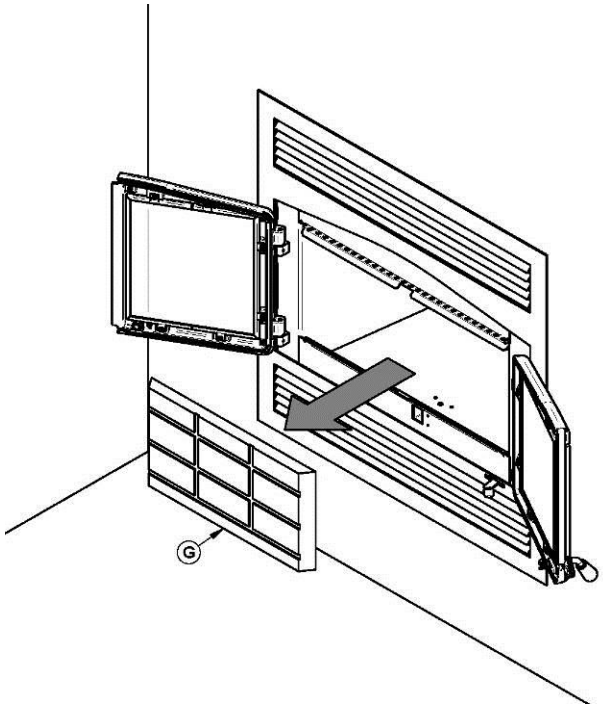

OSBURN LIMITED LIFETIME WARRANTY

The warranty of the manufacturer extends only to the original retail purchaser and is not transferable. This warranty covers brand new products only, which have not been altered, modified nor repaired since shipment from factory. Proof of purchase (dated bill of sale), model name and serial number must be supplied when making any warranty claim to your OSBURN dealer.

This warranty applies to normal residential use only. This warranty is void if the unit is used to burn material other than cordwood (for which the unit is not certified by EPA) and void if not operated according to the owner's manual. Damages caused by misuse, abuse, improper installation, lack of maintenance, over firing, negligence or accident during transportation, power failures, downdrafts, venting problems or under-estimated heating area are not covered by this warranty. The recommended heated area for a given appliance is defined by the manufacturer as its capacity to maintain a minimum acceptable temperature in the designated area in case of a power failure.

This warranty does not cover any scratch, corrosion, distortion, or discoloration. Any defect or damage caused by the use of unauthorized or other than original parts voids this warranty. An authorized qualified technician must perform the installation in accordance with the instructions supplied with this product and all local and national building codes. Any service call related to an improper installation is not covered by this warranty.

The manufacturer may require that defective products be returned or that digital pictures be provided to support the claim. Returned products are to be shipped prepaid to the manufacturer for investigation. Transportation fees to ship the product back to the purchaser will be paid by the manufacturer. Repair work covered by the warranty, executed at the purchaser's domicile by an authorized qualified technician requires the prior approval of the manufacturer. All parts and labour costs covered by this warranty are limited according to the table below.

The manufacturer, at its discretion, may decide to repair or replace any part or unit after inspection and investigation of the defect. The manufacturer may, at its discretion, fully discharge all obligations with respect to this warranty by refunding the wholesale price of any warranted but defective parts. The manufacturer shall, in no event, be responsible for any uncommon, indirect, consequential damages of any nature, which are in excess of the original purchase price of the product. A one-time replacement limit applies to all parts benefiting from lifetime coverage. This warranty applies to products purchased after June 1st, 2015.

DESCRIPTION	WARRANTY APPLICATION*	
	PARTS	LABOUR
Combustion chamber (welds only) and cast iron door frame.	Lifetime	5 years
Ceramic glass (thermal breakage only**), plating (manufacturing defect**), and convector air-mate.	Lifetime	N/A
Surrounds, heat shields, ash drawer, steel legs, pedestal, trims (aluminum extrusions), C-Cast baffle**, vermiculite baffle**, secondary air tubes**, removable stainless steel combustion chamber, deflectors, and supports.	7 years	N/A
Handle assembly, glass retainers and air control mechanism.	5 years	3 years
Removable carbon steel combustion chamber components.	5 years	N/A
Standard and optional blower, heat sensors, switches, rheostat, wiring, and electronics.	2 years	1 year
Paint (peeling**), gaskets, insulation, ceramic fiber blankets, firebricks, and other options.	1 year	N/A
All parts replaced under the warranty.	90 days	N/A

Subject to limitations above.** ****Picture required.

Labour cost and repair work to the account of the manufacturer are based on a predetermined rate schedule and must not exceed the wholesale price of the replacement part.

Shall your unit or a components be defective, contact immediately your **OSBURN** dealer. To accelerate processing of your warranty claim, make sure to have on hand the following information when calling:

- Your name, address and telephone number;
- Bill of sale and dealer's name;
- Installation configuration;
- Serial number and model name as indicated on the nameplate fixed to the back of your unit;
- Nature of the defect and any relevant information.

Before shipping your unit or defective component to our plant, you must obtain an Authorization Number from your OSBURN dealer. Any merchandise shipped to our plant without authorization will be refused automatically and returned to sender.

Wood_Revision: January 2018